ZED-F9T

u-blox F9 high accuracy timing module

Integration manual

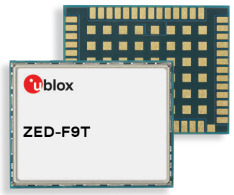

Abstract

This document describes the features and application of ZED-F9T, a multi-band GNSS module offering nano-second level timing accuracy.

UBX-21040375 - R04
C1-Public

www.u-blox.com

Document information

Title	**ZED-F9T**	
Subtitle	u-blox F9 high accuracy timing module	
Document type	Integration manual	
Document number	UBX-21040375	
Revision and date	R04	15-Jun-2026
Disclosure restriction	C1-Public	

This document applies to the following products:

Type number	FW version	PCN reference	RN reference
ZED-F9T-00B-02	TIM 2.20	UBX-21050800	UBX-21050656
ZED-F9T-10B-01	TIM 2.20	UBX-21050800	UBX-21050656
ZED-F9T-20B-00	TIM 2.25	N/A	UBXDOC-304424225-18252

u-blox or third parties may hold intellectual property rights in the products, names, logos and designs included in this document. Copying, reproduction, or modification of this document or any part thereof is only permitted with the express written permission of u-blox. Disclosure to third parties is permitted for clearly public documents only.

The information contained herein is provided "as is" and u-blox assumes no liability for its use. No warranty, either express or implied, is given, including but not limited to, with respect to the accuracy, correctness, reliability and fitness for a particular purpose of the information. This document may be revised by u-blox at any time without notice. For the most recent documents and product statuses, visit www.u-blox.com.

Copyright © 2026, u-blox AG.

Contents

Document information **2**
Contents **3**
1 Integration manual overview **6**
2 System description **7**
2.1 Overview 7
2.2 Architecture 7
2.2.1 Block diagram 7
3 Receiver functionality **8**
3.1 Receiver configuration 8
3.1.1 Changing the receiver configuration 8
3.1.2 Default GNSS configuration 8
3.1.3 Default interface settings 9
3.1.4 Basic receiver configuration 9
3.1.5 Primary and secondary output 11
3.1.6 Legacy configuration interface compatibility 14
3.1.7 Navigation configuration 14
3.2 SBAS 19
3.3 Geofencing 21
3.3.1 Introduction 21
3.3.2 Interface 21
3.3.3 Geofence state evaluation 21
3.3.4 Using a PIO for geofence state output 22
3.4 Logging 22
3.4.1 Introduction 22
3.4.2 Setting the logging system up 22
3.4.3 Information about the log 23
3.4.4 Recording 24
3.4.5 Retrieval 25
3.4.6 Command message acknowledgment 25
3.5 Communication interfaces 26
3.5.1 UART 27
3.5.2 I2C interface 28
3.5.3 SPI interface 31
3.5.4 USB interface 32
3.6 Predefined PIOs 33
3.6.1 D_SEL 33
3.6.2 RESET_N 33
3.6.3 SAFEBOOT_N 33
3.6.4 TIMEPULSE 34
3.6.5 EXTINT 34
3.7 Antenna supervisor 34
3.7.1 Antenna voltage control - ANT_OFF 34
3.7.2 Antenna short detection - ANT_SHORT_N 35
3.7.3 Antenna short detection auto recovery 35

3.7.4 Antenna open circuit detection - ANT_DETECT ... 36
3.8 AssistNow GNSS assistance ... 36
3.8.1 AssistNow Live Orbits ... 37
3.8.2 Preserving AssistNow and operational data during power-off ... 39
3.9 Clocks and time ... 39
3.9.1 Receiver local time ... 39
3.9.2 Navigation epochs ... 40
3.9.3 iTOW timestamps ... 40
3.9.4 GNSS times ... 41
3.9.5 Time validity ... 41
3.9.6 UTC representation ... 41
3.9.7 Leap seconds ... 42
3.9.8 Real-time clock ... 42
3.9.9 Date ... 43
3.10 Timing functionality ... 43
3.10.1 TIME mode ... 44
3.10.2 Time pulse ... 45
3.10.3 Time mark ... 49
3.10.4 Time mark for Common View Time Transfer ... 50
3.10.5 Differential timing ... 50
3.10.6 Differential timing mode configuration ... 51
3.11 Security ... 53
3.11.1 Spoofing detection and monitoring ... 53
3.11.2 Jamming and interference detection and monitoring ... 53
3.11.3 Spoofing and jamming indication ... 54
3.11.4 GNSS receiver security ... 54
3.11.5 Galileo Open Service Navigation Message Authentication (OSNMA) ... 55
3.12 u-blox protocol feature descriptions ... 58
3.12.1 Broadcast navigation data ... 58
3.12.2 Save-on-shutdown ... 66
3.12.3 Spectrum analyzer ... 66
3.12.4 Sky view signal masking ... 67
3.13 Forcing a receiver reset ... 68
3.14 Firmware upload ... 69
3.15 Production test ... 69
3.15.1 Connected sensitivity test ... 69
3.15.2 Go/No go tests for integrated devices ... 69
4 Design ... 70
4.1 Pin assignment ... 70
4.2 Power supply ... 72
4.2.1 VCC: Main supply voltage ... 72
4.2.2 V_BCKP: Backup supply voltage ... 72
4.2.3 ZED-F9T power supply ... 73
4.3 ZED-F9T minimal design ... 73
4.4 Antenna ... 74
4.4.1 Active Antenna Power Supply ... 76
4.4.2 Antenna supervisor circuit ... 79
4.5 EOS/ESD precautions ... 81
4.5.1 ESD protection measures ... 81
4.5.2 EOS precautions ... 81

4.5.3 Safety precautions ... 82
4.6 Electromagnetic interference on I/O lines ... 82
4.6.1 General notes on interference issues ... 82
4.6.2 In-band interference mitigation ... 83
4.6.3 Out-of-band interference ... 83
4.7 Layout ... 84
4.7.1 Placement ... 84
4.7.2 Thermal and mechanical considerations ... 84
4.7.3 Package footprint, copper and paste mask ... 84
4.7.4 Layout guidance ... 86
4.8 Design guidance ... 88
4.8.1 General considerations ... 88
4.8.2 Backup battery ... 88
4.8.3 RF front-end circuit options ... 88
4.8.4 Antenna/RF input ... 89
4.8.5 Ground pads ... 90
4.8.6 Schematic design ... 90
4.8.7 Layout design-in guideline ... 90
4.9 I2C design recommendations ... 90
4.9.1 I2C pull up calculation ... 90
4.9.2 EMI/EMC considerations for I2C bus ... 91
5 Product handling ... 92
5.1 ESD handling precautions ... 92
5.2 Soldering ... 93
5.3 Tapes ... 96
5.4 Reels ... 97
Appendix ... 98
A Glossary ... 98
Related documents ... 99
Revision history ... 100
Contact ... 101

1 Integration manual overview

This document is an important source of information on all aspects of ZED-F9T system, software and hardware design. The purpose of this document is to provide guidelines for a successful integration of the receiver with the customer's end product.

2 System description

2.1 Overview

ZED-F9T is a multi-band GNSS module offering 5 ns (1-sigma) timing accuracy with unparalleled low power consumption.

ZED-F9T incorporates the u-blox F9 multi-band platform in a small surface-mount device with a form factor of 22 x 17 mm.

2.2 Architecture

The ZED-F9T receiver provides all the necessary RF and baseband processing to enable multi-band, multi-constellation operation. The block diagram below shows the key functionality.

2.2.1 Block diagram

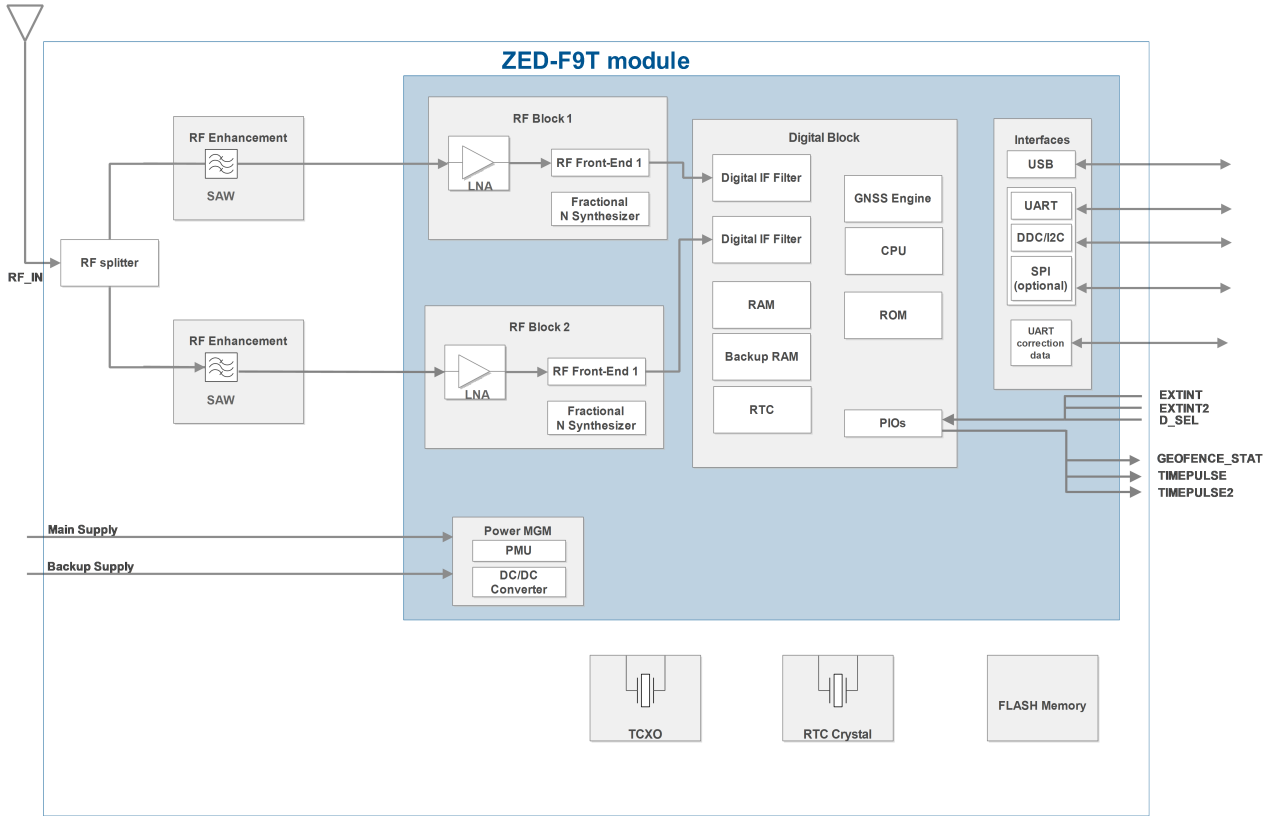

Figure 1: ZED-F9T block diagram

An active antenna is mandatory with ZED-F9T.

3 Receiver functionality

This chapter describes the ZED-F9T operational features and their configuration.

3.1 Receiver configuration

ZED-F9T is fully configurable with UBX configuration interface keys. The configuration database in the receiver's RAM holds the current configuration, which is used by the receiver at run-time. It is constructed on startup of the receiver from several sources of configuration. The configuration interface and the available keys are described fully in the applicable Interface description [2].

A configuration setting stored in RAM remains effective until power-down or reset. If stored in BBR (battery-backed RAM), the setting will be used as long as the backup battery supply remains. Configuration settings can be saved permanently in flash memory.

⚠ **CAUTION** The configuration interface has changed from earlier u-blox positioning receivers. Legacy messages have been deprecated and are not supported as of firmware version TIM 2.24. Users are advised to adopt the configuration interface described in this document. See legacy UBX-CFG message fields reference section in the applicable Interface description [2].

Configuration interface settings are held in a database consisting of separate configuration items. An item is made up of a pair consisting of a key ID and a value. Related items are grouped together and identified under a common group name: CFG-GROUP-*; a convention used in u-center and within this document. Within u-center, a configuration group is identified as "Group name" and the configuration item is identified as the "item name" under the "Generation 9 Configuration View" - "Advanced Configuration" view.

The UBX messages available to change or poll the configurations are UBX-CFG-VALSET, UBX-CFG-VALGET, and UBX-CFG-VALDEL. For more information about these messages and the configuration keys, see the configuration interface section in the applicable Interface description [2].

3.1.1 Changing the receiver configuration

All configuration messages, including legacy UBX-CFG messages, will result in a UBX-ACK-ACK or UBX-ACK-NAK response. If several configuration messages are sent without waiting for this response then the receiver may pause processing of input messages until processing of a previous configuration message has been completed. When this happens a warning message "wait for cfg ACK" will be sent to the host.

3.1.2 Default GNSS configuration

The ZED-F9T default GNSS configuration is set as follows:

ZED-F9T-00B:

- GPS: L1C/A, L2C
- GLONASS: L1OF, L2OF
- Galileo: E1B/C, E5b
- BeiDou: B1I, B2I
- QZSS: L1C/A, L2C

ZED-F9T-10B:

- GPS: L1C/A
- GLONASS: L1OF
- Galileo: E1B/C, E5a

- BeiDou: B1I, B2a
- QZSS: L1C/A, L5

ZED-F9T-20B:

- GPS: L1C/A
- Galileo: E1B/C, E5a
- BeiDou: B1I, B1C, B2a
- QZSS: L1C/A, L5

The NavIC L5 signal is supported by ZED-F9T-10B and ZED-F9T-20B, but not enabled in the default GNSS configuration. SBAS is also supported but not enabled by default.

For more information about the default configuration, see the applicable Interface description [2].

3.1.3 Default interface settings

Interface	Settings
UART1 output	38400 baud, 8 bits, no parity bit, 1 stop bit. NMEA protocol with **GGA, GLL, GSA, GSV, RMC, VTG, TXT, ZDA** messages are output by default. UBX and RTCM 3.4 (TIM 2.20 supports only upto version 3.3) protocols are enabled by default but no output messages are enabled by default.
UART1 input	38400 baud, 8 bits, no parity bit, 1 stop bit. UBX, NMEA and RTCM 3.4 (TIM 2.20 supports only upto version 3.3) input protocols are enabled by default.
UART2 output	38400 baud, 8 bits, no parity bit, 1 stop bit. UBX protocol cannot be enabled. RTCM 3.3 protocol is enabled by default but no output messages are enabled by default. NMEA protocol is disabled by default.
UART2 input	38400 baud, 8 bits, no parity bit, 1 stop bit. UBX protocol cannot be enabled and will not receive UBX input messages. RTCM 3.3 protocol is enabled by default. NMEA protocol is disabled by default.
USB	Default messages activated as in UART1. Input/output protocols available as in UART1.
I2C	Available for communication in the Fast-mode with an external host CPU in peripheral mode only. Default messages activated as in UART1. Input/output protocols available as in UART1. Maximum bit rate 400 kb/s.
SPI	Allow communication to a host CPU, operated in peripheral mode only. Default messages activated as in UART1. Input/output protocols available as in UART1. SPI is not available unless D_SEL pin is set to low (see the D_SEL section).

Table 1: Default interface settings

☞ Refer to the applicable Interface description [2] for information about further settings.

☞ By default, ZED-F9T outputs NMEA messages that include satellite data for all GNSS bands being received. This results in a high NMEA output load for each navigation period. Make sure the UART baud rate used is sufficient for the selected navigation rate and the number of GNSS signals being received.

3.1.4 Basic receiver configuration

This section summarizes the basic receiver configuration most commonly used.

3.1.4.1 Communication interface configuration

Several configuration groups allow operation mode configuration of the various communication interfaces. These include parameters for the data framing, transfer rate and enabled input/output protocols. See Communication interfaces section for details. The configuration groups available for each interface are:

Interface	Configuration groups
UART1	CFG-UART1-*, CFG-UART1INPROT-*, CFG-UART1OUTPROT-*
UART2	CFG-UART2-*, CFG-UART2INPROT-*, CFG-UART2OUTPROT-*
USB	CFG-USB-*, CFG-USBINPROT-*, CFG-USBOUTPROT-*
I2C	CFG-I2C-*, CFG-I2CINPROT-*, CFG-I2COUTPROT-*
SPI	CFG-SPI-*, CFG-SPIINPROT-*, CFG-SPIOUTPROT-*

Table 2: Interface configurations

3.1.4.2 Message output configuration

The rate of the supported output messages is configurable.

If the rate configuration value is zero, then the corresponding message will not be output. Values greater than zero indicate how often the message is output.

For periodic output messages the rate relates to the event the message is related to. For example, the UBX-NAV-PVT (navigation, position, velocity and time solution) is related to the navigation epoch. If the rate of this message is set to one (1), it will be output for every navigation epoch. If the rate is set to two (2), it will be output every other navigation epoch. The rates of the output messages are individually configurable per communication interface. See the CFG-MSGOUT-* configuration group.

Some messages, such as UBX-MON-VER, are non-periodic and will only be output as an answer to a poll request.

The UBX-INF-* and NMEA-Standard-TXT information messages are non-periodic output messages that do not have a message rate configuration. Instead they can be enabled for each communication interface via the CFG-INFMSG-* configuration group.

☞ All message output is additionally subject to the protocol configuration of the communication interfaces. Messages of a given protocol will not be output until the protocol is enabled for output on the interface (see Communication interface configuration).

3.1.4.3 GNSS signal configuration

The GNSS constellations and signals are selected using keys from the CFG-SIGNAL-*. configuration group. Each GNSS constellation can be enabled or disabled independently except for QZSS and SBAS. A GNSS constellation is considered to be enabled when the constellation enable key is set and at least one of the constellation's signal keys is enabled.

☞ QZSS can be enabled only if the GPS operation is also configured. SBAS can be enabled with GPS or Galileo.

3.1.4.4 Antenna supervisor configuration

This section describes the antenna supervisor configuration, its use and restrictions.

The antenna supervisor is used to control an active antenna or an external LNA. The configuration of the antenna supervisor allows the following:

- Detect a short circuit in the antenna supply, automatically cut off the antenna supply, and recover once the antenna supply is resumed.

- Detect an open circuit in the antenna supply indicating the antenna is disconnected.
- Control antenna supply to optimize power consumption in software backup mode or power save mode (PSM).

See the table below for a description of the configuration items related to the antenna supervisor operation.

Configuration item	Description	Comments
CFG-HW-ANT_CFG_VOLTCTRL	Enables active antenna voltage control	
CFG-HW-ANT_CFG_SHORTDET	Enables short circuit detection	
CFG-HW-ANT_CFG_SHORTDET_POL	Short antenna detection polarity	Set to 1 if the required logic polarity is active-low (default)
CFG-HW-ANT_CFG_OPENDET	Enables open circuit detection	
CFG-HW-ANT_CFG_OPENDET_POL	Defines the antenna open circuit detection polarity	Set to 1 if the required logic polarity is active-low (default)
CFG-HW-ANT_CFG_PWRDOWN	Powers down antenna supply if short circuit is detected	Requires CFG-HW-ANT_CFG_VOLTCTRL and CFG-HW-ANT_CFG_SHORTDET to be enabled.
CFG-HW-ANT_CFG_PWRDOWN_POL	Defines the antenna power down logic polarity	Set to 1 if the required logic polarity is active-high (default)
CFG-HW-ANT_CFG_RECOVER	Enables auto recovery in the event of a short circuit	To use this feature, enable short circuit detection and CFG-HW-ANT_CFG_PWRDOWN.
CFG-HW-ANT_SUP_SWITCH_PIN	PIO-Pin (PIO number) used for switching antenna supply	It is recommended to use the default PIO number (PIO16). PIO15 or PIO8 can also be used if unassigned to other functions.
CFG-HW-ANT_SUP_SHORT_PIN	PIO-Pin (PIO number) used for detecting a short circuit in the antenna supply	It is recommended to use the default PIO number (PIO15).

Table 3: Antenna supervisor configuration

It is possible to obtain the status of the antenna supervisor through the UBX-MON-RF message. Moreover, any changes in the status of the antenna supervisor are reported to the host interface in the form of notice messages. For more information, see the applicable Interface description [2] for *antStatus* and *antPower* field description.

Status	Description
OFF	Antenna is off
ON	Antenna is on
DONTKNOW	Antenna power status is not known

Table 4: Antenna power status

3.1.4.5 NMEA high precision mode

ZED-F9T supports NMEA high precision mode. This mode increases the number of significant digits of the position output; latitude and longitude will have seven digits after the decimal point, and altitude will have three digits after the decimal point. By default it is not enabled since it violates the NMEA standard. NMEA high precision mode cannot be used while in NMEA compatibility mode or when NMEA output is limited to 82 characters. See configuration item CFG-NMEA-HIGHPREC in the applicable Interface description [2] for more details.

☞ NMEA high precision mode is disabled by default meaning that the default NMEA output will be insufficient to report a high precision position.

3.1.5 Primary and secondary output

3.1.5.1 Introduction

u-blox GNSS receivers output various navigation results and data calculated as part of the navigation solution. These include results such as position, altitude, velocity, status flags, accuracy estimate figures, satellite/signal information and more.

The ZED-F9T can provide this output in two streams:

- **Primary output:** Reports the results of a full navigation solution using all capabilities of the ZED-F9T, such as, for example, time mode.
- **Secondary output:** Reports the results of a GNSS standalone navigation solution.

Both the primary output and secondary output provide a similar set of information but the two outputs report different results. The primary output is reported in the form of UBX-NAV-* messages, while the secondary output is reported in the form of UBX-NAV2-* messages. Therefore, the UBX message class can be used to distinguish between the primary output and the secondary output. For the specification of the UBX-NAV2-* messages and for a full list of available UBX-NAV2-* messages, see the applicable Interface description [2].

☞ The secondary output is complementary to the primary output. It does not provide the full navigation solution of the primary output. It can be used to expand the applications of the ZED-F9T to enable using a second navigation solution in parallel with the primary navigation solution.

The rest of this section describes how to configure and use the secondary output, what is the expected output behavior, and provides examples that illustrate potential uses for the secondary output, while highlighting the differences between the primary and the secondary output.

3.1.5.2 Configuration

Configuring the secondary output to the application's needs requires:

- Enabling the secondary output
- Configuring the desired secondary output UBX-NAV2-* messages
- Optionally, configuring the properties of the secondary output navigation solution

The configuration items relevant to the secondary output are in the CFG-NAV2-* configuration group. The configuration items for enabling and configuring the output rate of the UBX-NAV2-* messages are in the CFG-MSGOUT-* group and are of the form CFG-MSGOUT-UBX_NAV2_*. An example set of secondary output configuration items is shown in the table below. For all available configuration items, see the applicable Interface description [2].

Configuration item	Description
CFG-NAV2-OUT_ENABLED	Enables secondary output
CFG-NAV2-SBAS_USE_INTEGRITY	Enables using SBAS integrity information in the secondary output
CFG-MSGOUT-UBX_NAV2_PVT_*	Enables UBX-NAV2-PVT secondary output message
CFG-MSGOUT-UBX_NAV2_TIMEGPS_*	Enables UBX-NAV2-TIMEGPS secondary output message

Table 5: Example secondary output configuration items

Enabling the secondary output: The first necessary step to enable the secondary output is to configure the CFG-NAV2-OUT_ENABLED configuration item appropriately. This will enable the secondary output navigation solution to run in parallel with the primary output navigation solution. By default, the secondary output is disabled. Note that if you do not follow the next step, there will be no secondary output visible in the ZED-F9T communication interfaces in the form of UBX-NAV2-* messages.

☞ Both primary and secondary output report a navigation solution computed at the same navigation rate. Enabling the secondary output may affect the maximum achievable navigation update rate due to the extra computational load.

Configuring the desired secondary output UBX-NAV2-* messages: The second necessary step is to configure the desired CFG-MSGGOUT-UBX_NAV2_* configuration items appropriately. These set the message output rates for the UBX-NAV2-* messages that you wish to output. By default, all UBX-NAV2-* message output rates are set to 0 and as such are not being output.

☞ Due to the increased message output, the interface load will be higher while the secondary output messages are enabled. Therefore, the interface baud rate may need to be adapted accordingly. Alternatively, it is possible to configure the UBX-NAV2-* messages with a different output rate from that of their primary output UBX-NAV-* counterparts.

Configuring the properties of the secondary output navigation solution: Optionally, it is possible to configure the properties of the secondary output navigation solution in order to adapt it to the application's needs.

A minimal subset of the primary output navigation solution configuration is available for the secondary output navigation solution configuration. All such available configuration items are in the CFG-NAV2-* configuration group (see applicable Interface description [2]).

Configuring any of the CFG-NAV2-* configuration items changes the behavior of the secondary output navigation solution only and not the primary output one. All such configuration items have a primary output configuration counterpart and have the same default value as their primary output configuration counterpart.

For example, the CFG-NAV2-SBAS_USE_INTEGRITY configuration item allows configuring the SBAS integrity feature differently for the primary output and the secondary output. Its primary output counterpart is the CFG-SBAS-USE_INTEGRITY configuration item and the default value of both configuration items is the same.

3.1.5.3 Expected output behavior

Once the secondary output is enabled and the desired secondary output UBX-NAV2-* messages are configured, the ZED-F9T will output both primary and secondary output data in the form of the enabled UBX-NAV-* and UBX-NAV2-* messages respectively.

In every navigation epoch, a set of UBX-NAV-* messages will be output followed by another set of UBX-NAV2-* messages. Both sets will be referring to the navigation solution of the same navigation epoch.

Each set will be delimited at its end with a UBX-NAV-EOE or a UBX-NAV2-EOE message respectively. In other words, a UBX-NAV-EOE message will be output at the end of the UBX-NAV-* class enabled messages and a UBX-NAV2-EOE message will be output at the end of the UBX-NAV2-* class enabled messages. For example, if only UBX-NAV-PVT, UBX-NAV2-PVT, UBX-NAV-TIMEGPS and UBX-NAV2-TIMEGPS are enabled on the same port with message output rate 1, then every navigation epoch output will be as follows: UBX-NAV-PVT, UBX-NAV-TIMEGPS, UBX-NAV-EOE, UBX-NAV2-PVT, UBX-NAV2-TIMEGPS, UBX-NAV2-EOE.

☞ Secondary output messages appear after the primary output messages. This results in a higher latency for the secondary output messages than the primary output messages.

☞ Contrary to UBX-NAV2-* messages, secondary output NMEA-NAV2-* messages are not delimited by an NMEA-equivalent to UBX-NAV-EOE.

The specification of the UBX-NAV2-* messages resembles that of the UBX-NAV-* messages. The payload specification of a UBX-NAV2 message is identical to the payload specification of its UBX-

NAV counterpart, allowing to easily adapt any existing message parsers. The primary output will contain results and data reflecting the full navigation solution of the ZED-F9T. The secondary output will contain results and data reporting a GNSS standalone navigation solution.

3.1.5.4 Example use cases

As an example, an application using a ZED-F9T that has been configured into time mode can enable the secondary output and monitor a GNSS standalone solution to average the position of the ZED-F9T over time to detect if the antenna position has moved with respect to the surveyed-in location.

3.1.6 Legacy configuration interface compatibility

Although there is some backwards compatibility for the legacy UBX-CFG configuration messages, users are strongly advised to adopt the configuration interface described in this document.

See Legacy UBX-CFG message fields reference section in the applicable Interface description [2].

3.1.7 Navigation configuration

This section presents various configuration options related to the navigation engine. These options can be configured through various configuration groups, such as CFG-NAVSPG-*, CFG-ODO-*, and CFG-MOT-*.

3.1.7.1 Platform settings

u-blox receivers support different dynamic platform models (see the table below) to adjust the navigation engine to the expected application environment. These platform settings can be changed dynamically without performing a power cycle or reset. The settings improve the receiver's interpretation of the measurements and thus provide a more accurate position output. Setting the receiver to an unsuitable platform model for the given application environment is likely to result in a loss of receiver performance and position accuracy.

The dynamic platform model can be configured through the CFG-NAVSPG-DYNMODEL configuration item. The supported dynamic platform models and their details can be seen in Table 6 and Table 7 below.

Platform	Description
Portable	Applications with low acceleration, e.g. portable devices. Suitable for most situations.
Stationary (default)	Used in timing applications (antenna must be stationary) or other stationary applications. Velocity restricted to 0 m/s. Zero dynamics assumed.
Pedestrian	Applications with low acceleration and speed, e.g. how a pedestrian would move. Low acceleration assumed.
Automotive	Used for applications with equivalent dynamics to those of a passenger car. Low vertical acceleration assumed.
At sea	Recommended for applications at sea, with zero vertical velocity. Zero vertical velocity assumed. Sea level assumed.
Airborne <1g	Used for applications with a higher dynamic range and greater vertical acceleration than a passenger car. No 2D position fixes supported.
Airborne <2g	Recommended for typical airborne environments. No 2D position fixes supported.
Airborne <4g	Only recommended for extremely dynamic environments. No 2D position fixes supported.
Wrist	Only recommended for wrist-worn applications. Receiver will filter out arm motion.

Table 6: Dynamic platform models

Platform	Max altitude [m]	Max horizontal velocity [m/s]	Max vertical velocity [m/s]	Sanity check type	Max position deviation
Portable	12000	310	50	Altitude and velocity	Medium
Stationary	9000	10	6	Altitude and velocity	Small
Pedestrian	9000	30	20	Altitude and velocity	Small
Automotive	6000	100	15	Altitude and velocity	Medium
At sea	500	25	5	Altitude and velocity	Medium
Airborne <1g	80000	100	6400	Altitude	Large
Airborne <2g	80000	250	10000	Altitude	Large
Airborne <4g	80000	500	20000	Altitude	Large
Wrist	9000	30	20	Altitude and velocity	Medium

Table 7: Dynamic platform model details

Applying dynamic platform models designed for high acceleration systems (e.g. airborne <2g) can result in a higher standard deviation in the reported position.

If a sanity check against a limit of the dynamic platform model fails, then the position solution is invalidated. Table 7 above shows the types of sanity checks which are applied for a particular dynamic platform model.

3.1.7.2 Navigation input filters

The navigation input filters in CFG-NAVSPG-* configuration group provide the input data of the navigation engine.

Configuration item	Description
CFG-NAVSPG-FIXMODE	By default, the receiver calculates a 3D position fix if possible but reverts to 2D position if necessary (**auto 2D/3D**). The receiver can be forced to only calculate 2D (**2D only**) or 3D (**3D only**) positions.
CFG-NAVSPG-CONSTR_ALT, CFG-NAVSPG-CONSTR_ALTVAR	The fixed altitude is used if fixMode is set to 2D only. A variance greater than zero must also be supplied.
CFG-NAVSPG-INFIL_MINELEV	Minimum elevation of a satellite above the horizon in order to be used in the navigation solution. Low elevation satellites may provide degraded accuracy, due to the long signal path through the atmosphere.
CFG-NAVSPG-INFIL_NCNOTHRS, CFG-NAVSPG-INFIL_CNOTHRS	A navigation solution will only be attempted if there are at least the given number of SVs with signals at least as strong as the given threshold.

Table 8: Navigation input filter parameters

If the receiver only has three satellites for calculating a position, the navigation algorithm uses a constant altitude to compensate for the missing fourth satellite. When a satellite is lost after a successful 3D fix (min four satellites available), the altitude is kept constant at the last known value. This is called a 2D fix.

☞ u-blox receivers do not calculate any navigation solution with less than three satellites. Time solution can be calculated with 1-2 satellites.

3.1.7.3 Navigation output filters

The result of a navigation solution is initially classified by the fix type (as detailed in the `fixType` field of UBX-NAV-PVT message). This distinguishes between failures to obtain a fix at all ("No Fix") and cases where a fix has been achieved, which are further subdivided into specific types of fixes (e.g. 2D, 3D, dead reckoning).

☞ The ZED-F9T firmware does not support the dead reckoning position fix type.

Where a fix has been achieved, a check is made to determine whether the fix should be classified as valid or not. A fix is only valid if it passes the navigation output filters as defined in CFG-NAVSPG-OUTFIL. In particular, both PDOP and accuracy values must be below the respective limits.

☞ Important: Users are recommended to check the `gnssFixOK` flag in the UBX-NAV-PVT or the NMEA valid flag. Fixes not marked valid should not be used.

UBX-NAV-STATUS message also reports whether a fix is valid in the `gpsFixOK` flag. This message has only been retained for backwards compatibility and users are recommended to use the UBX-NAV-PVT message.

3.1.7.3.1 Speed (3D) low-pass filter

The CFG-ODO-OUTLPVEL configuration item offers the possibility to activate a speed (3D) low-pass filter. The output of the speed low-pass filter is published in the UBX-NAV-VELNED message (`speed` field). The filtering level can be set via the CFG-ODO-VELLPGAIN configuration item with values between 0 (heavy low-pass filtering) and 255 (weak low-pass filtering).

☞ The internal filter gain is computed as a function of speed. Therefore, the level as defined in the CFG-ODO-VELLPGAIN configuration item defines the nominal filtering level for speeds below 5 m/s.

3.1.7.3.2 Course over ground low-pass filter

The CFG-ODO-OUTLPCOG configuration item offers the possibility to activate a course over ground low-pass filter when the speed is below 8 m/s. The output of the course over ground (also named heading of motion 2D) low-pass filter is published in the UBX-NAV-PVT message (`headMot` field), UBX-NAV-VELNED message (`heading` field), NMEA-RMC message (`cog` field) and NMEA-VTG message (`cogt` field). The filtering level can be set via the CFG-ODO-COGLPGAIN configuration item with values between 0 (heavy low-pass filtering) and 255 (weak low-pass filtering).

☞ The filtering level as defined in the CFG-ODO-COGLPGAIN configuration item defines the filter gain for speeds below 8 m/s. If the speed is higher than 8 m/s, no course over ground low-pass filtering is performed.

3.1.7.3.3 Low-speed course over ground filter

The CFG-ODO-USE_COG activates a low-speed course over ground filter and the CFG-ODO-COGMAXSPEED, CFG-ODO-COGMAXPOSACC configuration items offer the possibility to configure this feature (also named heading of motion 2D). This filter derives the course over ground from position at very low speed. The output of the low-speed course over ground filter is published in the UBX-NAV-PVT message (`headMot` field), UBX-NAV-VELNED message (`heading` field), NMEA-RMC message (`cog` field) and NMEA-VTG message (`cogt` field). If the low-speed course over ground filter is not configured, then the course over ground is computed as described in section Freezing the course over ground.

3.1.7.4 Static hold

Static hold mode allows the navigation algorithms to decrease the noise in the position output when the velocity is below a predefined "Static Hold Threshold". This reduces the position wander caused by environmental factors such as multi-path and improves position accuracy especially in stationary applications. By default, static hold mode is disabled.

If the speed drops below the defined "Static Hold Threshold", the static hold mode will be activated. Once static hold mode has been entered, the position output is kept static and the velocity is set to zero until there is evidence of movement again. Such evidence can be velocity, acceleration, changes of the valid flag (e.g. position accuracy estimate exceeding the position accuracy mask, see also section Navigation output filters), position displacement, etc.

The CFG-MOT-GNSSDIST_THRS configuration item additionally allows for configuration of distance threshold. If the estimated position is farther away from the static hold position than this threshold, static mode will be quit. The CFG-MOT-GNSSSPEED_THRS configuration item allows you to set a speed that the static hold will release.

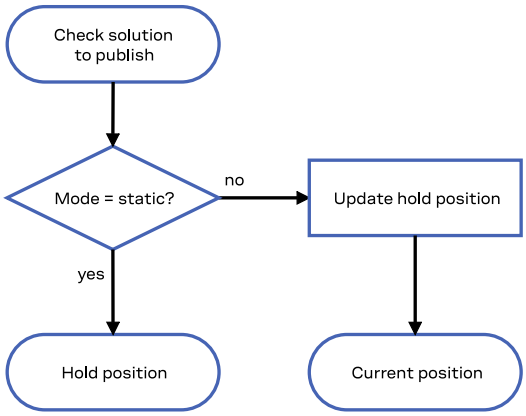

Figure 2: Position publication in static hold mode

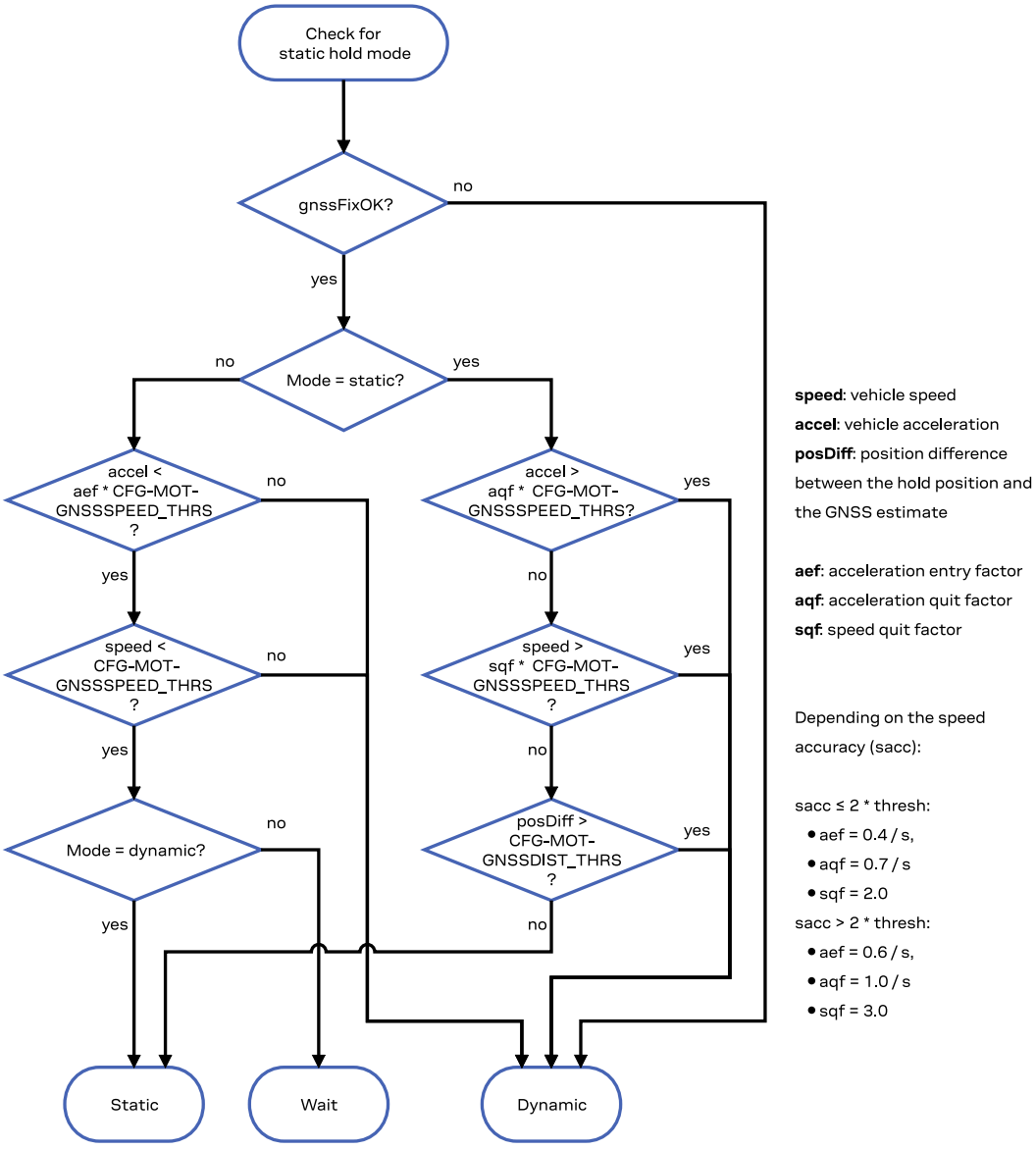

Figure 3: Flowchart of the static hold mode

3.1.7.5 Freezing the course over ground

If the low-speed course over ground filter is deactivated or inactive (see section Low-speed course over ground filter), the receiver derives the course over ground from the GNSS velocity information. If the velocity cannot be calculated with sufficient accuracy (e.g., with bad signals) or if the absolute speed value is very low (under 0.1 m/s) then the course over ground value becomes inaccurate too. In this case the course over ground value is frozen, i.e. the previous value is kept and its accuracy is degraded over time. These frozen values will not be output in the NMEA messages NMEA-RMC and NMEA-VTG unless the NMEA protocol is explicitly configured to do so (see NMEA protocol configuration in the applicable Interface description [2]).

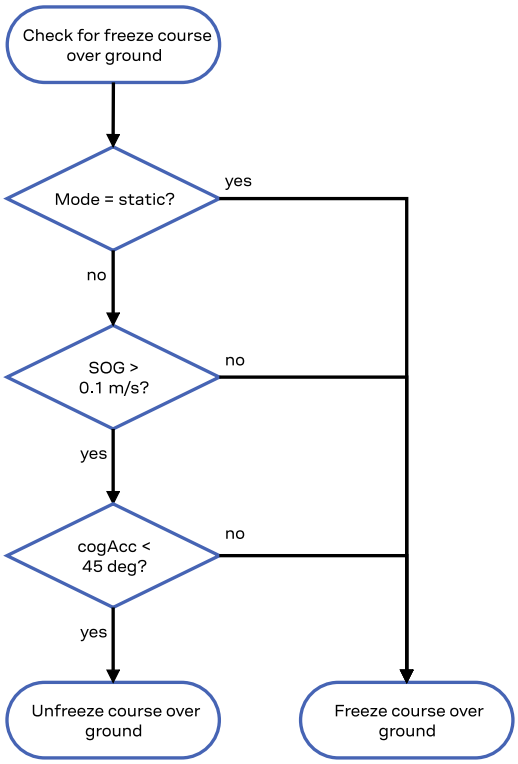

Figure 4: Flowchart of the course over ground freezing

3.2 SBAS

Although ZED-F9T can make use of SBAS satellites, opertional experience indicates that enabling SBAS may degrade the timing performance. For this reason, SBAS is disabled by default. The following section describes the receiver operation when SBAS reception is required by users.

The ZED-F9T is capable of receiving multiple SBAS signals concurrently, even from different SBAS systems (WAAS, EGNOS, MSAS, etc.). They can be tracked and used for navigation simultaneously. Every SBAS satellite that broadcasts ephemeris or almanac information can be used for navigation, just like a normal GNSS satellite.

For receiving correction data, the ZED-F9T automatically chooses the best SBAS satellite as its primary source. It will select only one since the information received from other SBAS satellites is redundant and could be inconsistent. The selection strategy is determined by the proximity of the satellites, the services offered by the satellite, the configuration of the receiver (test mode allowed/ disallowed, integrity enabled/disabled) and the signal link quality to the satellite.

If corrections are available from the chosen SBAS satellite and used in the navigation calculation, the differential status will be indicated in several output messages such as UBX-NAV-PVT, UBX-NAV-STATUS, UBX-NAV-SAT, NMEA-GGA, NMEA-GLL, NMEA-RMC and NMEA-GNS (see the applicable Interface description [2]). The message UBX-NAV-SBAS provides detailed information about which corrections are available and applied.

The most important SBAS feature for accuracy improvement is ionosphere correction. The measured data from regional Ranging and Integrity Monitoring Stations (RIMS) are combined to make a Total Electron Content (TEC) map. This map is transferred to the receiver via SBAS satellites to allow a correction of the ionosphere error on each received signal.

Message type	Message content	Source
0(0/2)	Test mode	All
1	PRN mask assignment	Primary
2, 3, 4, 5	Fast corrections	Primary
6	Integrity	Primary
7	Fast correction degradation	Primary
9	Satellite navigation (ephemeris)	All
10	Degradation	Primary
12	Time offset	Primary
17	Satellite almanac	All
18	Ionosphere grid point assignment	Primary
24	Mixed fast / long-term corrections	Primary
25	Long-term corrections	Primary
26	Ionosphere delays	Primary

Table 9: Supported SBAS messages

Each satellite services a specific region and its correction signal is only useful within that region. Planning is crucial to determine the best possible configuration, especially in areas where signals from different SBAS systems can be received:

- **Example 1 - SBAS receiver in North America:** In the eastern parts of North America, make sure that EGNOS satellites do not take preference over WAAS satellites. The satellite signals from the EGNOS system should be disallowed by using the PRN mask.
- **Example 2 - SBAS receiver in Europe:** Some WAAS satellite signals can be received in the western parts of Europe, therefore it is recommended that the satellites from all but the EGNOS system should be disallowed using the PRN mask.

☞ Although u-blox receivers try to select the best available SBAS correction data, it is recommended to configure them to exclude unwanted SBAS satellites.

To configure the SBAS functionalities use the CFG-SBAS-* configuration group.

Parameter	Description
CFG-SIGNAL-SBAS_ENA	Enabled/disabled status of the SBAS subsystem
CFG-SBAS-USE_TESTMODE	Allow/disallow SBAS usage from satellites in test mode
CFG-SBAS-USE_RANGING	Use the SBAS satellites for navigation (ranging)
CFG-SBAS-USE_DIFFCORR	Combined enable/disable switch for fast, long-term, and ionosphere corrections
CFG-SBAS-USE_INTEGRITY	Apply integrity information data
CFG-SBAS-ACCEPT_NOT_IN_PRNMASK[1]	Use corrections from SBAS SV, even if not self-included in PRN MASK
CFG-SBAS-USE_IONOONLY[1]	Use SBAS ionosphere correction only
CFG-SBAS-PRNSCANMASK	Allows selectively enabling/disabling SBAS satellites

Table 10: SBAS configuration parameters

☞ When SBAS integrity data is applied, the navigation engine stops using all signals for which no integrity data are available (including all non-GPS signals). It is not recommended to enable SBAS integrity on borders of SBAS service regions in order not to inadvertently restrict the number of available signals.

[1] Supported only for TIM 2.24 and later firmware releases.

☞ SBAS integrity information is required for at least 5 GPS satellites. If this condition is not met, SBAS integrity data will not be applied.

☞ Iono-only is the recommended SBAS configuration for timing applications.

☞ SBAS is only used if no correction service is available. If the connection stream is lost during the operation, the receiver will switch to using the SBAS corrections after the time set in CFG-NAVSPG-CONSTR_DGNSSTO (60 s by default) has elapsed.

☞ When the receiver switches from a solution using correction data to a standard position solution, the reference frame of the output position will switch from the one of the correction data to that of the standard position solution. For an SBAS solution this reference frame will be aligned within a few cm of WGS84 (and modern ITRF realizations).

3.3 Geofencing

3.3.1 Introduction

☞ This feature is not supported as of firmware version TIM 2.24.

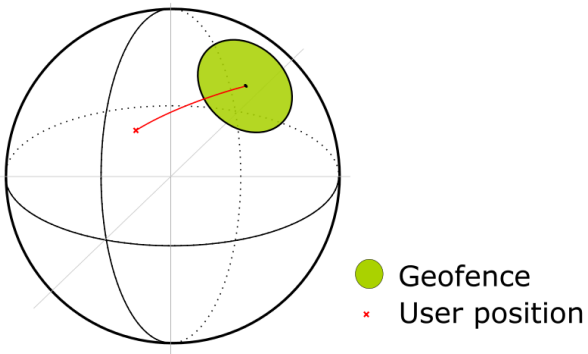

Figure 5: Geofence

The geofencing feature allows for the configuration of up to four circular areas (geofences) on the Earth's surface. The receiver will then evaluate for each of these areas whether the current position lies within the area or not and signal the state via UBX messaging and PIO toggling.

3.3.2 Interface

Geofencing can be configured using the CFG-GEOFENCE-* configuration group. The geofence evaluation is active whenever there is at least one geofence configured.

The current state of each geofence plus the combined state is output in UBX-NAV-GEOFENCE with every navigation epoch.

3.3.3 Geofence state evaluation

With every navigation epoch the receiver will evaluate the current solution's position versus the configured geofences. There are three possible outcomes for each geofence:

- *Inside* - The position is inside the geofence with the configured confidence level
- *Outside* - The position lies outside of the geofence with the configured confidence level
- *Unknown* - There is no valid position solution or the position uncertainty does not allow for unambiguous state evaluation

The position solution uncertainty (standard deviation) is multiplied with the configured confidence sigma level and taken into account when evaluating the geofence state (red circle in Figure 6).

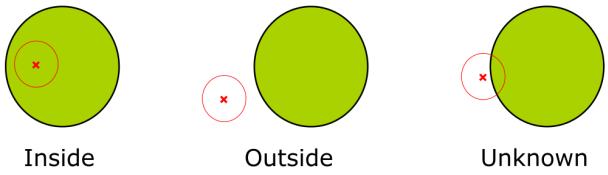

Figure 6: Geofence states

The combined state for all geofences is evaluated as the combination (Union) of all geofences:

- *Inside* - The position lies inside of at least one geofence
- *Outside* - The position lies outside of all geofences
- *Unknown* - All remaining states

3.3.4 Using a PIO for geofence state output

This feature can be used, for example, for waking up a sleeping host when a defined geofence condition is reached. The receiver will toggle the assigned pin according to the combined geofence state. Due to hardware restrictions, the geofence unknown state is not configurable and is always represented as HIGH. If the receiver is in the software backup mode or in the reset state, the pin will go to HIGH accordingly. The meaning of the LOW state can be configured using the CFG-GEOFENCE-PINPOL configuration item.

3.4 Logging

3.4.1 Introduction

☞ This feature is not supported as of firmware version TIM 2.24.

The logging feature allows position fixes and arbitrary byte strings from the host to be logged in the receiver's flash memory. Logging of position fixes happens independently of the host system, and can continue while the host is powered down.

The following table lists all the logging-related messages:

Message	Description
UBX-LOG-CREATE	Creates a log file and activates the logging system
UBX-LOG-ERASE	Erases a log file and deactivates the logging subsystem
UBX-LOG-INFO	Provides information about the logging system
UBX-LOG-STRING	Enables a host process to write a string of bytes to the log file

Table 11: Logging control and configuration messages

Message	Description
UBX-LOG-RETRIEVE	Starts the log retrieval process
UBX-LOG-RETRIEVEPOS	A position log entry returned by the receiver
UBX-LOG-RETRIEVEPOSEXTRA	Odometer position data
UBX-LOG-RETRIEVESTRING	A byte string log entry returned by the receiver
UBX-LOG-FINDTIME	Finds the index of the first entry (given time)

Table 12: Logging retrieval messages

3.4.2 Setting the logging system up

An empty log can be created using the UBX-LOG-CREATE message and a log can be deleted with the UBX-LOG-ERASE message. The logging system will only run if a log is in existence, so most logging

messages will be rejected with a UBX-ACK-NAK message if there is no log present. Only one log can be created at any one time so a UBX-ACK-NAK message will be returned if a log already exists. The message specifies the maximum size of the log in bytes (with some preset values provided). Both the logging subsystem and the receiver file-store have implementation overheads, so the total space available for log entries will be somewhat smaller than the size specified.

UBX-LOG-CREATE also allows the log to be specified as a circular log. If the log is circular, a set of older log entries will be deleted when it fills up, and the space freed up is used for new log entries. By contrast, if a non-circular log becomes full then new entries which do not fit will be rejected. UBX-LOG-CREATE also causes the logging system to start up so that further logging messages can be processed. The logging system will start up automatically on power-up if there is a log in existence. The log will remain in the receiver until specifically erased using the UBX-LOG-ERASE message.

The CFG-LOGFILTER-* configuration group controls whether logging of entries is currently enabled and selects position fix messages for logging.

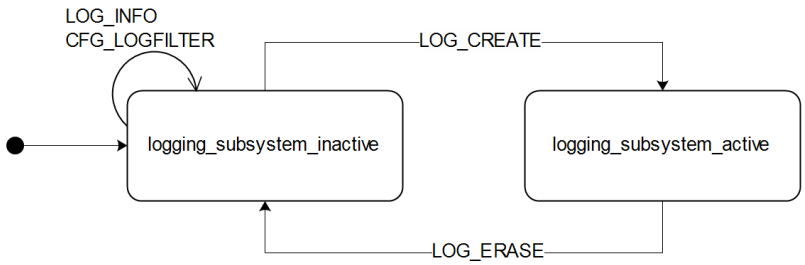

Figure 7: The top level active/inactive states of the logging subsystem

3.4.3 Information about the log

The receiver can be polled for a UBX-LOG-INFO message which will give information about the log. This will include the maximum size that the log can grow to (which, due to overheads, will be smaller than that requested in UBX-LOG-CREATE) and the amount of log space currently occupied. It will also report the number of entries currently in the log together with the time and date of the newest and oldest messages that have a valid time stamp.

Log entries are compressed and have housekeeping information associated with them, so the actual space occupied by log messages may be difficult to predict. The minimum size for a position fix entry is 9 bytes and the maximum 24 bytes, the typical size is 10 or 11 bytes. If the odometer is enabled then this will use at least another three bytes per fix.

Each log also has a fixed overhead which is dependent on the log type. The approximate size of this overhead is shown in the following table.

Log type	Overhead
circular	Up to 40 kB
non-circular	Up to 8 kB

Table 13: Log overhead size

The number of entries that can be logged in any given flash size can be estimated as follows:

Approx. number of entries = (flash size available for logging - log overhead)/typical entry size

For example, if 1500 kB of flash is available for logging (after other flash usage such as the firmware image is taken into account) a non-circular log would be able to contain approximately 139000 entries: ((1500*1024)- (8*1024))/11 = 138891.

3.4.4 Recording

The CFG-LOGFILTER-RECORD_ENA configuration item must be set to *true* to enable recording into the log. Nothing will be recorded if recording is disabled, otherwise position fix and UBX-LOG_STRING entries can be recorded. When recording is enabled an entry will also be created from each UBX-LOG-STRING message. These will be timestamped if the receiver has current knowledge of time.

The CFG-LOGFILTER-* configuration group has several values which can be used to select position fix entries for logging. If CFG-LOGFILTER-APPLY_ALL_FILTERS is *false*, then all position fixes will be logged (subject to a maximum rate of 1 Hz). Otherwise, a position is logged if any of the or if all of MIN_INTERVAL, TIME_THRS, SPEED_THRS or POSITION_THRS thresholds are exceeded. If a threshold is set to zero it is ignored.

Position fixes are only recorded if a valid fix is obtained. Failed and invalid fixes are not recorded. Position fixes are compressed to reduce the amount of flash space used. In order to improve the compression, the fix values are rounded. This means that the values returned by the logging system may differ slightly from those that are gathered in real time.

The recorded data for a fix comprises:

- The time and date of the fix recorded to a precision of one second.
- Latitude and longitude to a precision of one millionth of a degree. Depending on position on Earth this is a precision in the order of 0.1 m.
- Altitude (height above mean sea level) to a precision of 0.1 m. Entries with an altitude lower than -470 m (lower than the lowest point on earth) or higher than 20,000 m may not be recorded in the log.
- Ground speed to a precision of 1 cm/s.
- The fix type (only successful fix types, since these are the only ones recorded).
- The number of satellites used in the fix is recorded, but there is a maximum count which can be recorded. If the actual count exceeds this maximum count then the maximum count will be recorded. If a log entry is retrieved with a satellite count equal to the maximum this means that value or more. The maximum count is 51.
- A horizontal accuracy estimate is recorded to give an indication of fix quality. This is an approximate compressed representation of the accuracy as determined by the fix process. Any accuracy less than 0.7 m will be recorded as 0.7 m and any value above 1 km will be recorded as 1 km. Within these limits, the recorded accuracy will always be greater than the fix accuracy number (by up to 40%).
- Heading to a precision of one degree.
- Odometer distance data (if odometer is enabled).

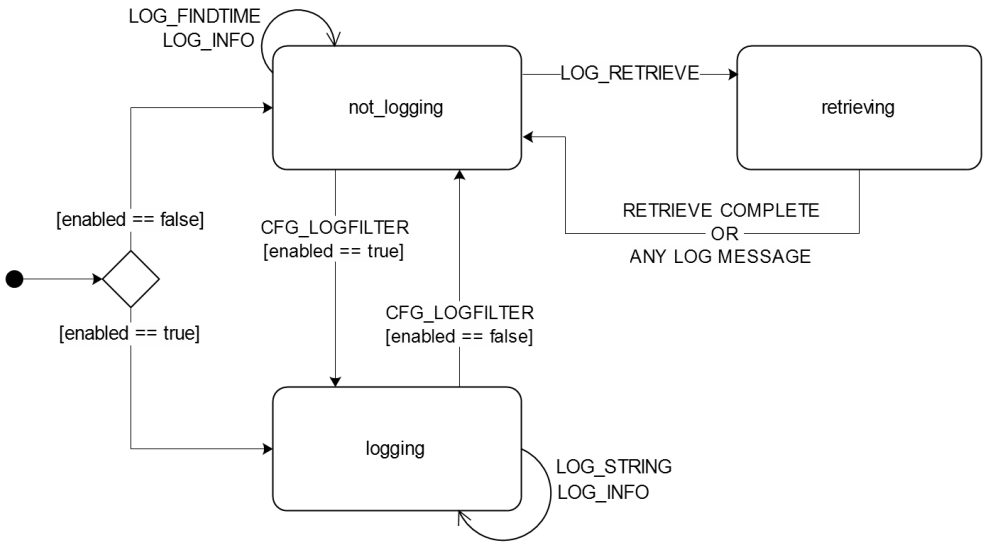

Figure 8: The states of the active logging subsystem

3.4.5 Retrieval

UBX-LOG-RETRIEVE starts the process which allows the receiver to output log entries. UBX-LOG-INFO may be helpful to a host system in order to understand the current log status before retrieval is started.

Once retrieval has started, one message will be output from the receiver for each log entry requested. Sending any logging message to the receiver during retrieval will cause the retrieval to stop before the message is processed.

To maximize the speed of transfer it is recommended that a high communications data rate is used and GNSS processing is stopped during the transfer (see UBX-CFG-RST).

UBX-LOG-RETRIEVE can specify a start entry index and entry count. The maximum number of entries that can be returned in response to a single UBX-LOG-RETRIEVE message is 256. If more entries than this are required the message will need to be sent multiple times with different startEntry indices. It might be useful to stop recording via CFG_LOGFILTER-RECORD_ENA while retrieving log entries from a circular log to avoid deletion of the requested entries between the request and transmission.

The receiver will send a UBX-LOG-RETRIEVEPOS message for each position fix log entry and a UBX-LOG-RETRIEVESTRING message for each string log entry. If the odometer was enabled at the time a position was logged, then a UBX-LOG-RETRIEVEPOSEXTRA will also be sent. Messages will be sent in the order in which they were logged, so UBX-LOG-RETRIEVEPOS and UBX-LOG-RETRIEVESTRING messages may be interspersed in the message stream.

The UBX-LOG-FINDTIME message can be used to search a log for the index of the first entry less than or equal to the given time. This index can then be used with the UBX-LOG-RETRIEVE message to provide time-based retrieval of log entries.

3.4.6 Command message acknowledgment

Some log operations may take a long time to execute because of the time taken to write to flash memory. The time for some operations may be unpredictable since the number and timing of flash operations may vary. In order to allow host software to synchronize to these delays logging

messages will always produce a response. This will be UBX-ACK-NAK in case of error, otherwise UBX-ACK-ACK unless there is some other defined response to the message.

It is possible to send a small number of logging commands without waiting for acknowledgment, since there is a command queue, but this risks confusion between the acknowledgments for the commands. Also a command queue overflow would result in commands being lost.

3.5 Communication interfaces

u-blox receivers are equipped with a communication interface[2] which is multi-protocol capable. The interface ports can be used to transmit GNSS measurements, monitor status information and configure the receiver.

A protocol (e.g. UBX, NMEA) can be assigned to several ports simultaneously, each configured with individual settings (e.g. baud rate, message rates, etc.). More than one protocol (e.g. UBX protocol and NMEA) can be assigned to a single port (multi-protocol capability), which is particularly useful for debugging purposes.

The ZED-F9T provides UART1, UART2, SPI, I2C and USB interfaces for communication with a host CPU. The interfaces are configured via the configuration methods described in the applicable interface description [2].

The following table shows the port numbers reported in the UBX-MON-COMMS messages.

Port no.	UBX-MON-COMMS portId	Electrical interface
0	0x0000	I2C
1	0x0100	UART1
-	0x0101	Reserved
-	0x0200	Reserved
2	0x0201	UART2
3	0x0300	USB
4	0x0400	SPI

Table 14: Port number assignment

☞ Ensure that all interface pins are properly isolated when VCC is not supplied. They can be allowed to float or they can be connected to a high impedance.

Example isolation circuit is shown below.

[2] The signal names and related terms have been replaced with new terminology in this document.

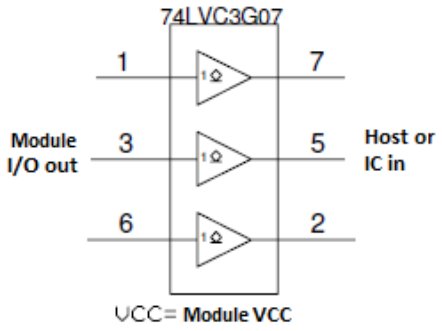

Figure 9: ZED-F9T output isolation

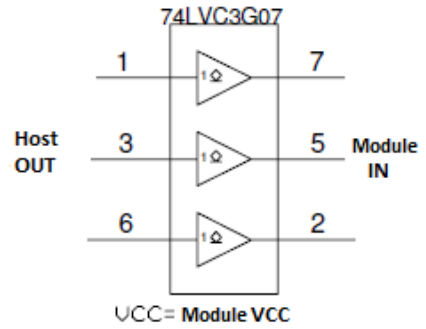

Figure 10: ZED-F9T input isolation

3.5.1 UART

A Universal Asynchronous Receiver/Transmitter (UART) port consists of an RX and a TX line. Neither handshaking signals nor hardware flow control signals are available. The UART interface protocol and baud rate can be configured but there is no support for setting different baud rates for reception and transmission.

The ZED-F9T includes two UART serial ports. UART1 can be used as a host interface for configuration, monitoring and control. UART2 is available as an optional stand-alone RTCM interface and cannot be used as a host interface.

☞ The UART RX interface will be disabled when more than 100 frame errors are detected during a one-second period. This can happen if the wrong baud rate is used or the UART RX pin is grounded. An error message appears when the UART RX interface is re-enabled at the end of the one-second period.

Baud rate	Data bits	Parity	Stop bits
9600	8	none	1
19200	8	none	1
38400	8	none	1
57600	8	none	1
115200	8	none	1

Baud rate	Data bits	Parity	Stop bits
230400	8	none	1
460800	8	none	1
921600	8	none	1

Table 15: Possible UART interface configurations

☞ The default baud rate is 38400 baud. To prevent buffering problems it is recommended not to run at a lower baud rate than the default.

☞ The baud rate for safeboot mode is 9600 baud. See more information about safeboot mode in the SAFEBOOT_N section.

Allow a short time delay of typically 100 ms between sending a baud rate change message and providing input data at the new rate. Otherwise some input characters may be ignored or the port could be disabled until the interface is able to process the new baud rate.

Note that for protocols such as NMEA or UBX, it does not make sense to change the default word length values (data bits) since these properties are defined by the protocol and not by the electrical interface.

If the amount of data configured is too much for a certain port's bandwidth (e.g. all UBX messages output on a UART port with a baud rate of 9600), the buffer will fill up. Once the buffer space is exceeded, new messages to be sent will be dropped. To prevent message loss, the baud rate and communication speed or the number of enabled messages should be carefully selected so that the expected number of bytes can be transmitted in less than one second.

3.5.2 I2C interface

An I2C interface is available for communication with an external host CPU or u-blox cellular modules in peripheral mode only. The I2C protocol and electrical interface supports the Fast-mode of the I2C industry standard with a maximum SCL clock frequency of 400 kHz. Backwards compatibility with Standard-mode I2C bus operation is not supported.

The SCL and SDA pins have internal pull-up resistors which should be sufficient for most applications. However, depending on the speed of the host and the load on the I2C lines additional external pull-up resistors may be necessary.

☞ To use the I2C interface D_SEL pin must be left open.

☞ In designs where the host uses the same I2C bus to communicate with more than one u-blox receiver, the I2C peripheral address for each receiver must be configured to a different value. Typically most u-blox receivers are configured to the same default I2C peripheral address value. To poll or set the I2C peripheral address, use the CFG-I2C-ADDRESS configuration item (see the applicable interface description [2]).

The CFG-I2C-ADDRESS configuration item is an 8-bit value that includes the I2C peripheral address in the 7 most significant bits and the read/write flag in the least significant bit.

3.5.2.1 I2C register layout

The I2C interface allows 256 registers to be addressed. As shown in Figure 11, only three of these are currently implemented.

The data registers 0 to 252 at addresses 0x00 to 0xFC contain reserved information, the result from their reading is currently undefined. The data registers 0 to 252 are 1 byte wide.

At addresses 0xFD and 0xFE it is possible to read the currently available number of bytes.

The register at address 0xFF allows the data stream to be read. If there is no data awaiting transmission from the receiver, then this register delivers value 0xFF, which cannot be the first byte of a valid message. If the message data is ready for transmission, the successive reads of register 0xFF will deliver the waiting message data.

☞ Do not use registers 0x00 to 0xFC. They are reserved for future use and they do not currently provide any meaningful data.

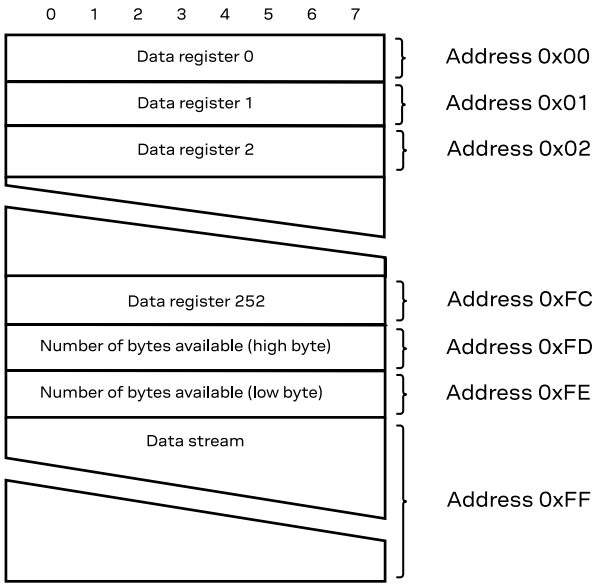

Figure 11: I2C register layout

3.5.2.2 Read access types

There are two I2C read transfer forms:

- The "random access" form: includes a peripheral register address and allows any register to be read.
- The "current address" form: omits the register address.

Figure 12 shows the format of the first one, the "random access" form of the request. Following the start condition from the controller, the 7-bit device address and the R/W bit (which is a logic low for write access) are clocked onto the bus by the controller transmitter. The receiver answers with an acknowledge (logic low) to indicate that it recognizes the address.

Next, the 8-bit address of the register to be read must be written to the bus. Following the receiver's acknowledgment, the controller again triggers a start condition and writes the device address, but this time the R/W bit is a logic high to initiate the read access. Now, the controller can read 1 to N bytes from the receiver, generating a not-acknowledge and a stop condition after the last byte being read.

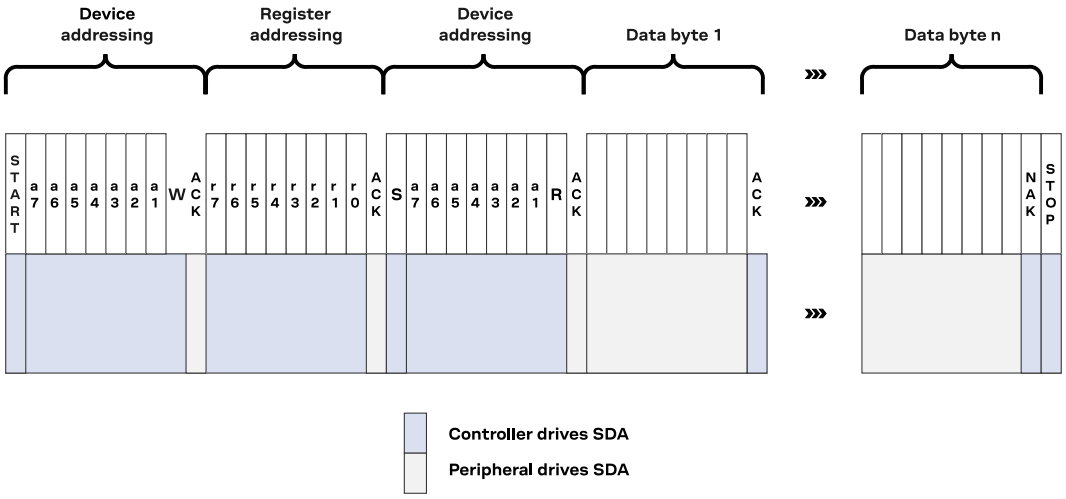

Figure 12: I2C random read access

If the second form, "current address" is used, an address pointer in the receiver is used to determine which register to read. This address pointer will increment after each read unless it is already pointing at register 0xFF, the highest addressable register, in which case it remains unaltered.

The initial value of this address pointer at startup is 0xFF, so by default all current address reads will repeatedly read register 0xFF and receive the next byte of message data (or 0xFF if no message data is waiting).

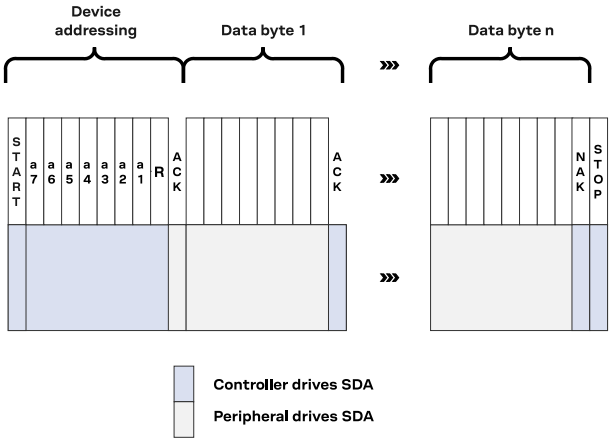

Figure 13: I2C current address read access

3.5.2.3 Write access

The receiver does not provide any write access except for writing UBX and NMEA messages to the receiver, such as configuration or aiding data. Therefore, the register set mentioned in the section Read access is not writeable.

Following the start condition from the controller, the 7-bit device address and the R/W bit (which is a logic low for write access) are clocked onto the bus by the controller transmitter. The receiver answers with an acknowledge (logic low) to indicate that it is responsible for the given address.

The controller can write 2 to N bytes to the receiver, generating a stop condition after the last byte being written. The number of data bytes must be at least 2 to properly distinguish from the write access to set the address counter in random read accesses.

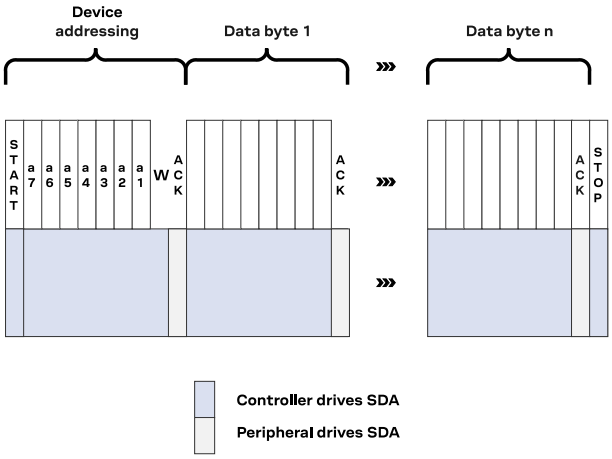

Figure 14: I2C write access

3.5.3 SPI interface

ZED-F9T has an SPI peripheral interface that can be selected by setting D_SEL = 0. The SPI peripheral interface is shared with UART1 and I2C port, the physical pins are same. The SPI pins available are:

- SPI_SDO (TXD)
- SPI_SDI (RXD)
- SPI_CS_N
- SPI_CLK

See more information about communication interface selection from the D_SEL section.

The SPI interface is designed to allow communication to a host CPU. The interface can be operated in peripheral mode only.

☞ The SPI interface transmits data in Most Significant Bit (MSB) first order.

3.5.3.1 Read access

As the register mode is not implemented for the SPI port, only the UBX/NMEA message stream is provided. This stream is accessed using the back-to-back read and write access (see section Back-to-back read and write access below). When no data is available to be written to the receiver, SDI should be held logic high, i.e. all bytes written to the receiver are set to 0xFF.

To prevent the receiver from being busy parsing incoming data, the parsing process is stopped after 50 subsequent bytes containing 0xFF. The parsing process is re-enabled with the first byte not equal to 0xFF.

If the receiver has no more data to send, it sets SDO to logic high, i.e. all bytes transmitted decode to 0xFF. An efficient parser in the host will ignore all 0xFF bytes which are not part of a message and will resume data processing as soon as the first byte not equal to 0xFF is received.

3.5.3.2 Back-to-back read and write access

The receiver does not provide any write access except for writing UBX and NMEA messages to the receiver, such as configuration or aiding data. For every byte written to the receiver, a byte will simultaneously be read from the receiver. While the controller writes to SDI of the peripheral, at the same time it needs to read from SDO of the peripheral, as any pending data will be output by

the receiver with this access. The data on SDO represents the results from a current address read, returning 0xFF when no more data is available.

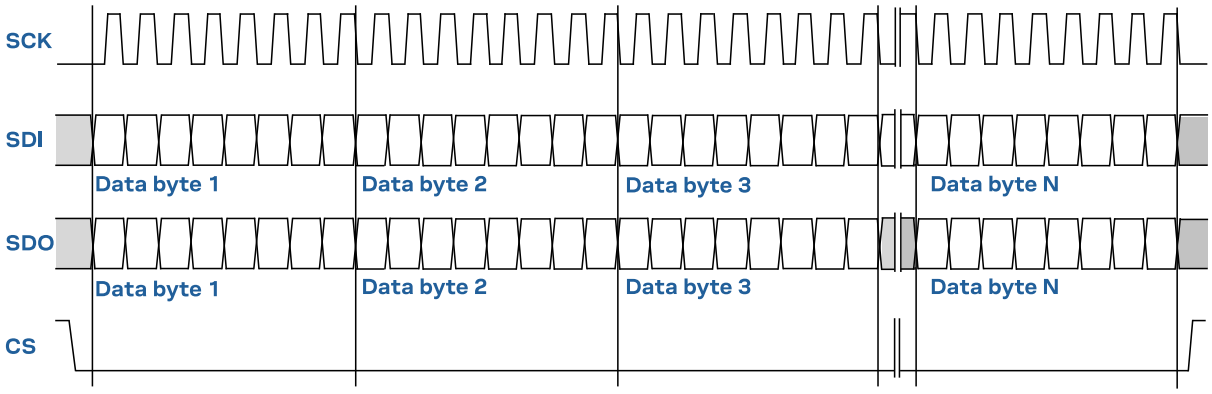

Figure 15: SPI back-to-back read/write access

3.5.4 USB interface

The USB 2.0 Full-Speed (12 Mbit/s) interface provided on the device is intended exclusively for host communication during debugging operations and must not be utilized for mass production. Due to the specific hardware implementation, certification of this USB interface may not be feasible.

If the receiver executes code from internal ROM (i.e. when a valid flash firmware image is not detected), the USB behavior can differ compared to executing a firmware image from flash memory. USB host compatibility testing is thus recommended in this scenario.

The ZED-F9T receiver supports only self-powered mode operation in which the receiver is supplied from its own power supply. The V_USB pin is used to detect the availability of the USB port, i.e. whether the receiver is connected to a USB host.

☞ USB suspend mode is not supported.

☞ USB bus-powered mode is not supported.

☞ It is important to connect V_USB to ground and leave data lines open when the USB interface is not used in an application.

☞ The voltage range for V_USB is specified from 3.0 V to 3.6 V, which differs slightly from the specification for VCC.

☞ The boot screen is retransmitted on the USB port after enumeration. However, messages generated between receiver startup and USB enumeration are not visible on the USB port.

There are additional hardware requirements if USB is used:

- V_USB (pin 38) requires 1 uF capacitor mounted adjacent to the pin to ensure correct V_USB voltage detection
- The V_USB (Pin 38) voltage should be sourced from an LDO enabled by the module VCC and supplied from the USB host.
- A pull-down resistor is required on the output of this V_USB LDO
- Apply USB_DM and USB_DP series resistors; typically 27 Ω

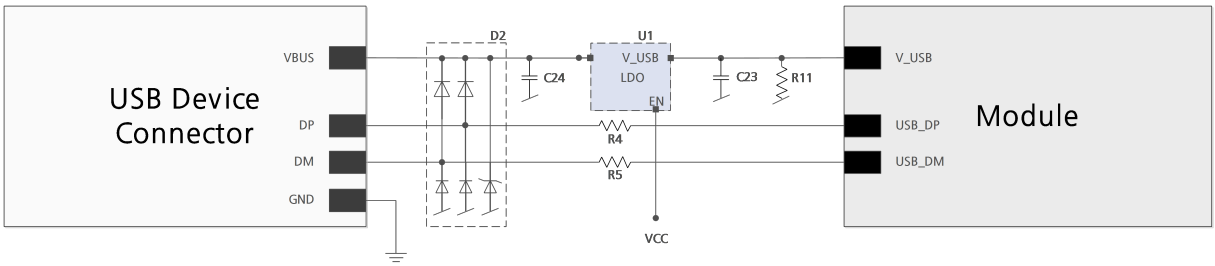

Figure 16: ZED-F9T example circuit for USB interface

R11 = 100 k Ω is recommended

R4, R5 = 27 Ω is recommended

3.6 Predefined PIOs

In addition to the communication ports, there are some predefined PIOs provided by ZED-F9T to interact with the receiver. These PIOs are described in this section.

☞ If hardware backup mode is used a proper isolation of the interfaces is needed.

3.6.1 D_SEL

The D_SEL pin can be used to configure the functionality of the combined UART1, I2C, and SPI pins. It is possible to configure the pins as UART1 + I2C, or as SPI. SPI is not available unless D_SEL pin is set to low. See Table 16 below.

Pin no.	D_SEL == 0	D_SEL == 1
42	SPI_SDO	UART1 TXD
43	SPI_SDI	UART1 RXD
44	SPI_CS_N	I2C SDA
45	SPI_CLK	I2C SCL

Table 16: D_SEL configuration

3.6.2 RESET_N

The ZED-F9T provides the ability to reset the receiver. The RESET_N pin is an input-only pin with an internal pull-up resistor. Driving RESET_N low for at least 100 ms will trigger a cold start.

☞ The RESET_N pin will delete all information and trigger a cold start. It should only be used as a recovery option.

3.6.3 SAFEBOOT_N

The ZED-F9T provides a SAFEBOOT_N pin that is used to command the receiver safeboot mode.

If this pin is low at power up, the receiver starts in safeboot mode and GNSS operation is disabled.

The safeboot mode can be used to recover from situations where the flash content has become corrupted and needs to be restored.

In safeboot mode the receiver runs from a passive oscillator circuit with less accurate timing and hence the receiver is unable to communicate via USB.

In this mode UART1, I2C or SPI communication is possible. For communication via UART1 in safeboot mode, the host must send a training sequence (0x55 0x55 at 9600 baud) to the receiver in order to begin communication. After this the host must wait at least 2 ms before sending any data.

It is recommended to have the possibility to pull the SAFEBOOT_N pin low in the application. This can be provided using an externally connected test point or a host I/O port.

3.6.4 TIMEPULSE

The ZED-F9T provides time pulse signals on the TIMEPULSE and TIMEPULSE2 pins.

More information about the time pulse feature and its configuration can be found in the Time pulse section.

☞ The TIMEPULSE2 and the SAFEBOOT_N functions share the same PIO pin via series resistors, hence the TIMEPULSE2 pin should not be pulled low or high at reset or startup in the application circuit, otherwise this can provoke or inhibit safeboot operation.

3.6.5 EXTINT

EXTINT, EXTINT2 are external interrupt pins with fixed input voltage thresholds with respect to VCC. They can be used for functions such as accurate external frequency aiding and on/off control. The external frequency aiding can be used to calibrate the clock. This enables faster fix of satellite signals (UBX-MGA-INI-FREQ or UBX-MGA-INI-TIME_XXX) and can be used during normal operation or during the production test. Another possibility to use the extint feature is to wake up the receiver after putting it into backup mode; this can be set up with UBX-RXM-PMREQ. Leave open if unused, this function is disabled by default.

3.7 Antenna supervisor

An active antenna supervisor provides the means to check the antenna for open and short circuits and to shut off the antenna supply if a short circuit is detected. Once enabled, the active antenna supervisor produces status messages, reporting in NMEA and/or UBX protocol.

The antenna supervisor can be configured through the CFG-HW-ANT_* configuration items. The current configuration of the active antenna supervisor can also be checked by polling the related CFG-HW_ANT_* configuration items.

The current active antenna status can be determined by polling the UBX-MON-RF message. If an antenna is connected, the initial state after power-up is “Active Antenna OK" in the UBX-MON-RF message in the u-center "Message View".

The Antenna supervisor circuit section details the required circuit and the following sections explain how to enable and monitor each feature:

3.7.1 Antenna voltage control - ANT_OFF

☞ Antenna status (as reported in UBX-MON-RF and UBX-INF-NOTICE messages) is not reported unless the antenna voltage control has been enabled.

Enable the antenna voltage control by setting the configuration item CFG-HW-ANT_CFG_VOLTCTRL to true (1).

Result:

- UBX-MON-RF in u-center "Message View": Antenna status = OK. Antenna power status = ON
- ANT_OFF pin = active high to turn antenna off therefore the pin is low to enable an external antenna.

Start-up message at power up if configuration stored:

```
$GNTXT,01,01,02,ANTSUPERV=AC *00
```

```
$GNTXT,01,01,02,ANTSTATUS=INIT*3B

$GNTXT,01,01,02,ANTSTATUS=OK*25
```

`ANTSUPERV=AC` indicates antenna control is activated

3.7.2 Antenna short detection - ANT_SHORT_N

Enable the antenna short detection by setting the configuration item CFG-HW-ANT_CFG_SHORTDET to true (1).

Result:

- UBX-MON-RF in u-center "Message View": Antenna status = OK. Antenna power status = ON
- ANT_OFF = active high to disable an external antenna therefore the pin is low to enable an external antenna.
- ANT_SHORT_N = active low to detect a short therefore the pin is high (PIO pull up enabled to be pulled low if shorted)

Start-up message at power up if configuration is stored:

```
$GNTXT,01,01,02,ANTSUPERV=AC SD *37

$GNTXT,01,01,02,ANTSTATUS=INIT*3B

$GNTXT,01,01,02,ANTSTATUS=OK*25
```

`ANTSUPERV=AC SD` (Antenna control and short detection activated)

Then if shorted (ANT_SHORT_N pulled low):

- UBX-MON-RF in u-center "Message View": Antenna status = SHORT. Antenna power status = ON (Antenna power control power down when short has not been enabled = off by default).

```
$GNTXT,01,01,02,ANTSTATUS=SHORT*73
```

- ANT_OFF = active high therefore still low (still enabled as auto power down is not enabled)

☞ After a detected antenna short, the reported antenna status will keep on being reported as shorted. If the antenna short detection auto recovery is enabled, then the antenna status can recover after a timeout. To recover the antenna status immediately, a power cycle is required or configuring the antenna short detection functionality off and on.

3.7.3 Antenna short detection auto recovery

Enable the antenna short detection auto recovery by setting the configuration item CFG-HW-ANT_CFG_RECOVER to true (1).

Result:

- UBX-MON-RF in u-center "Message View": Antenna status = OK. Antenna power status = ON
- ANT_OFF = active high there for the PIO is low to enable an external antenna
- ANT_SHORT_N = high (PIO pull up enabled to be pulled low if shorted)

Start-up message at power up if configuration is stored:

```
$GNTXT,01,01,02,ANTSUPERV=AC SD PDoS SR*3E

$GNTXT,01,01,02,ANTSTATUS=INIT*3B

$GNTXT,01,01,02,ANTSTATUS=OK*25
```

`ANTSUPERV=AC SD PDoS SR` (indicates short circuit recovery added - SR)

Then if antenna is shorted (ANT_SHORT_N pulled low):

- `$GNTXT,01,01,02,ANTSTATUS=SHORT*73`
- UBX-MON-RF in u-center "Message View": Antenna status = SHORT. Antenna power status = OFF
- ANT_OFF = high (to disable - active high)

After a time out period receiver will retest the short condition by enabling ANT_OFF = LOW

If a short is not present it will report antenna condition is OK:

`$GNTXT,01,01,02,ANTSTATUS=OK*25`

UBX-MON-RF in u-center "Message View": Antenna status = OK. Antenna power status = ON

3.7.4 Antenna open circuit detection - ANT_DETECT

Enable the antenna open circuit detection by setting the configuration item CFG-HW-ANT_CFG_OPENDET to true (1).

Result:

- UBX-MON-RF in u-center "Message View": Antenna status = OK. Antenna power status = ON
- ANT_OFF = active high therefore PIO is low to enable external antenna
- ANT_SHORT_N = active low therefore PIO is high (PIO pull up enabled to be pulled low if shorted)
- ANT_DETECT = active high therefore PIO is high (PIO pull up enabled to be pulled low if antenna not detected)

Start-up message at power up if configuration is stored:

`$GNTXT,01,01,02,ANTSUPERV=AC SD OD PDoS SR*15`

`$GNTXT,01,01,02,ANTSTATUS=INIT*3B`

`$GNTXT,01,01,02,ANTSTATUS=OK*25`

`ANTSUPERV=AC SD OD PDoS SR` (indicates open circuit detection added - OD)

Then if ANT_DETECT is pulled low to indicate no antenna:

`$GNTXT,01,01,02,ANTSTATUS=OPEN*35`

Then if ANT_DETECT is left floating or it is pulled high to indicate antenna connected:

`$GNTXT,01,01,02,ANTSTATUS=OK*25`

3.8 AssistNow GNSS assistance

GNSS receivers require information on the exact time as well as satellite orbits for several satellites to obtain a position fix. At start-up, the receiver finds the satellite signals and decodes the information from the signals. This typically takes 20–30 s under good signal conditions. Under adverse signal conditions, finding signals and decoding the data may take several minutes or even completely fail.

Assistance data enables the receiver to find satellites faster and even compute the position without the need to download data from satellites. This significantly reduces the time-to-first-fix (TTFF), improves fix accuracy, and increases satellite availability, even under poor signal conditions.

The AssistNow service is a u-blox proprietary assisted GNSS (A-GNSS) service compatible with the u-blox GNSS receivers. The AssistNow Live Orbits and the AssistNow Predicted Orbits services are accessed over the HTTP or HTTPS protocols.

The AssistNow Autonomous feature runs locally on the receiver and generates mid- and long-term predicted orbits without an internet connection. The orbit prediction is based on broadcast ephemerides.

For more information on the AssistNow services, refer to the AssistNow service documentation [4].

Table 17 summarizes the AssistNow feature and services.

	AssistNow Live Orbits	AssistNow Predictive Orbits	AssistNow Autonomous
Type of feature	Service	Service	Stand-alone feature
Internet access	Always available	Sporadic	Not needed
Data types[3]	EPH, ALM, TIME, AUX	ANO, ALM	ANO, ALM
Data validity	2–4 hours	1–14 days	3–6 days
Data transfer size	Medium	High	None (local)
Flash memory	Not required	Optional, receiver or host	Optional, receiver or host
TTFF performance	Best	Good	Good/fair

Table 17: AssistNow service overview

☞ ZED-F9T supports AssistNow Live Orbits only.

3.8.1 AssistNow Live Orbits

AssistNow Live Orbits is used in GNSS receiver systems with direct internet access. At start-up, the host downloads the satellite ephemerides, time aiding, and other optional data from the service and sends it to the receiver. The assistance data can reduce the TTFF down to 1–2 s under good signal conditions.

For the supported GNSS constellations and signals, refer to the ZED-F9T Data sheet [1].

3.8.1.1 Data types

Fast signal acquisition requires time information as well as satellite and orbital data. Current time is also needed to determine the validity and use other assistance data.

The time assistance message UBX-MGA-INI-TIME_UTC contains the current time and the accuracy for the time provided. Time accuracy is set by default to 10 s to consider the network latency and any processing delay on the host. The ephemerides contain precise short-term satellite and orbital data. The ephemerides are valid approximately 2–4 hours depending on the GNSS system.

Almanac contains a reduced-precision subset of the clock and ephemeris parameters. It is valid for a few weeks and enables the receiver to find the currently visible satellites faster. AssistNow Live Orbits provides also auxiliary information on satellite health status, ionospheric corrections to improve position accuracy, and time information on different GNSS systems.

The total AssistNow Live Orbits data size is approximately 2–4 kB per GNSS constellation. For detailed information on the supported GNSS constellations and satellites, data types, validity period, data size, and the full list of messages, refer to the AssistNow service documentation [4].

Table 18 summarizes the AssistNow Live Orbits assistance data and the related messages. The GNSS constellation name has been replaced with XXX in table.

[3] Data types: ephemeris (EPH), almanac (ALM), predictive orbits (ANO), auxiliary data (AUX), and time (TIME)

Type of data	Message(s)	Description
Time assistance (TIME)	UBX-MGA-INI-TIME_UTC	Current time (coarse)
Ephemeris (EPH)	UBX-MGA-XXX-EPH	Current satellite and orbital data for fix calculation
Almanac (ALM)	UBX-MGA-XXX-ALM	Coarse orbital information
Auxiliary data (AUX)	UBX-MGA-XXX-IONO	Simplified ionospheric corrections (Klobuchar)
	UBX-MGA-XXX-HEALTH	Satellite health information
	UBX-MGA-XXX-UTC	UTC time information
	UBX-MGA-XXX-TIMEOFFSET	Time offset relative to the GPS time

Table 18: AssistNow Live Orbits assistance data

3.8.1.2 Host operation

The host operation consists of the following steps:

- Start up the receiver
- Download the AssistNow Live Orbits assistance data from the service
- Transfer the Assistance data to the receiver immediately at start-up

Downloading and storing assistance data

The host downloads the AssistNow Live Orbits assistance data from the service. The received data consists of UBX messages starting with time assistance followed by ephemerides, almanac, and auxiliary data.

The host can store the assistance data in the memory and use it for subsequent receiver start-ups until it expires. In addition, the receiver can maintain the assistance data and other information in its battery-backed RAM (BBR) memory.

Data download from the service is not required if valid assistance data is already available on the host system or on the receiver. However, it is recommended to replace ephemerides close to expiry with fresh data from the service.

For more information on maintaining data on the receiver, refer to the section Preserving AssistNow and operational data during receiver power-off.

Transferring assistance data to the receiver

The assistance data must be sent to the receiver immediately at the receiver start-up. If downloading data from the service, send the messages directly after receiving them in the same order they were received: time assistance followed by ephemerides, almanac, and auxiliary data.

☞ Send the assistance data immediately at the receiver start-up.

If valid assistance data stored on the host is used, the host must construct the UBX-MGA-INI-TIME_UTC message with current time and accuracy for it. The time accuracy provided must not be better than the actual accuracy of the host time.

☞ Do not provide too optimistic value for the time accuracy. This may degrade the start-up performance.

If the receiver already has time information available, it ignores the time assistance and continues to use its internal time. To force the receiver use the assisted time, clear the real-time-clock (RTC) time in the BBR memory before sending time assistance.

Apart from time assistance, sending new assistance data from the host clears the existing data in the receiver. Valid assistance data is stored in the receiver's BBR memory and used accordingly. However, expired assistance data is rejected resulting in a loss of assistance data.

☞ Do not send ephemerides close to expiring to the receiver. This may degrade the start-up performance.

3.8.2 Preserving AssistNow and operational data during power-off

The receiver stores the assistance data from the host in the navigation database. During operation, the receiver collects satellite broadcast data and updates the database when new data becomes available. Also time and position are continuously updated.

The receiver automatically copies the satellite data to the BBR to maintain it during the receiver power-off. Alternatively, the host can store satellite data on the host side or in the flash memory connected to the receiver.

The following mechanisms in Table 19 can be used instead of or in parallel to the AssistNow feature. The maintained assistance data can be used for subsequent receiver start-ups until it expires.

☞ The quality of the assistance data degrades over time resulting in longer TTFF and reduced initial position accuracy. Provide fresh assistance data for best start-up performance.

Method	Storage	Preserved information	Storing and restoring data
Backup supply voltage	BBR	Operational state, MGA information, calibration data, user configuration in BBR, and RTC time estimate	Receiver automatically stores the data as long as the V_BCKP pin is supplied and automatically restores it on restart.
Save-on-shutdown	Flash memory	Operational state, MGA information and calibration data	Requires the host to instruct the receiver to save the data in flash; the receiver automatically restores the data on restart.
Database dump	Host system	Navigation database including satellite orbit information	Requires the host to poll and store the database dump (UBX-MGA-DBD) and send it back on restart.

Table 19: Methods to preserve operational data during power-off

3.9 Clocks and time

This section introduces and explains the concepts of receiver clocks and time bases.

3.9.1 Receiver local time

The receiver is dependent on a local oscillator for both the operation of its radio parts and also for timing within its signal processing. No matter what nominal frequency the local oscillator has, u-blox receivers subdivide the oscillator signal to provide a 1-kHz reference clock signal, which is used to drive many of the receiver's processes. In particular, the measurement of satellite signals is arranged to be synchronized with the "ticking" of this 1-kHz clock signal.

When the receiver first starts, it has no information about how these clock ticks relate to other time systems; it can only count time in 1 millisecond steps. However, as the receiver derives information from the satellites it is tracking or from aiding messages, it estimates the time that each 1-kHz clock tick takes in the time base of the chosen GNSS system. This estimate of GNSS time based on the local 1-kHz clock is called receiver local time.

As receiver local time is a mapping of the local 1-kHz reference onto a GNSS time base, it may experience occasional discontinuities, especially when the receiver first starts up and the information it has about the time base is changing. Indeed, after a cold start, the receiver local time will initially indicate the length of time that the receiver has been running. However, when the

receiver obtains some credible timing information from a satellite or an aiding message, it will jump to an estimate of GNSS time.

3.9.2 Navigation epochs

Each navigation solution is triggered by the tick of the 1-kHz clock nearest to the desired navigation solution time. This tick is referred to as a **navigation epoch**. If the navigation solution attempt is successful, one of the results is an accurate measurement of time in the time base of the chosen GNSS system, called **GNSS system time**. The difference between the calculated GNSS system time and receiver local time is called **clock bias** (and **clock drift** is the rate at which this bias is changing).

In practice the receiver's local oscillator will not be as stable as the atomic clocks to which GNSS systems are referenced and consequently clock bias will tend to accumulate. However, when selecting the next navigation epoch, the receiver will always try to use the 1-kHz clock tick which it estimates to be closest to the desired fix period as measured in GNSS system time. Consequently the number of 1-kHz clock ticks between fixes will occasionally vary. This means that when producing one fix per second, there will normally be 1000 clock ticks between fixes, but sometimes, to correct drift away from GNSS system time, there will be 999 or 1001.

The GNSS system time calculated in the navigation solution is always converted to a time in both the GPS and UTC time bases for output.

Clearly when the receiver has chosen to use the GPS time base for its GNSS system time, conversion to GPS time requires no work at all, but conversion to UTC requires knowledge of the number of leap seconds since GPS time started (and other minor correction terms). The relevant GPS-to-UTC conversion parameters are transmitted periodically (every 12.5 minutes) by GPS satellites, but can also be supplied to the receiver via the UBX-MGA-GPS-UTC aiding message. By contrast, when the receiver has chosen to use the GLONASS time base as its GNSS system time, conversion to GPS time is more difficult as it requires knowledge of the difference between the two time bases, but as GLONASS time is closely linked to UTC, conversion to UTC is easier.

When insufficient information is available for the receiver to perform any of these time base conversions precisely, predefined default offsets are used. Consequently plausible times are nearly always generated, but they may be wrong by a few seconds (especially shortly after receiver start). Depending on the configuration of the receiver, such "invalid" times may well be output, but with flags indicating their state (e.g. the "valid" flags in UBX-NAV-PVT).

3.9.3 iTOW timestamps

All the main UBX-NAV messages (and some other messages) contain an **iTOW** field which indicates the GPS time at which the navigation epoch occurred. Messages with the same iTOW value can be assumed to have come from the same navigation solution.

Note that iTOW values may not be valid (i.e. they may have been generated with insufficient conversion data) and therefore it is not recommended to use the iTOW field for any other purpose.

☞ The original designers of GPS chose to express time/date as an integer week number (starting with the first full week in January 1980) and a time of week (often abbreviated to TOW) expressed in seconds. Manipulating time/date in this form is far easier for digital systems than the more conventional year/month/day, hour/minute/second representation. Consequently, most GNSS receivers use this representation internally, only converting to a more conventional form at external interfaces. The iTOW field is the most obvious externally visible consequence of this internal representation.

If reliable absolute time information is required, users are recommended to use the UBX-NAV-PVT navigation solution message which also contains additional fields that indicate the validity (and

accuracy in UBX-NAV-PVT) of the calculated times (see also the GNSS times section below for further messages containing time information).

3.9.4 GNSS times

Each GNSS has its own time reference for which detailed and reliable information is provided in the messages listed in the table below.

Time reference	Message
GPS time	UBX-NAV-TIMEGPS
BeiDou time	UBX-NAV-TIMEBDS
GLONASS time	UBX-NAV-TIMEGLO
Galileo time	UBX-NAV-TIMEGAL
NavIC time	UBX-NAV-TIMENAVIC
UTC time	UBX-NAV-TIMEUTC

Table 20: GNSS times

3.9.5 Time validity

Information about the validity of the time solution is given in the following form:

- Time validity: Information about time validity is provided in the `valid` flags (e.g. `validDate` and `validTime` flags in the UBX-NAV-PVT message). If these flags are set, the time is known and considered valid for use. These flags are shown in table GNSS times in section GNSS times above as well as in the UBX-NAV-PVT message.
- Time validity confirmation: Information about confirmed validity is provided in the `confirmedDate` and `confirmedTime` flags in the UBX-NAV-PVT message. If these flags are set, the time validity can be confirmed by using an additional independent source, meaning that the probability of the time to be correct is very high. Note that information about time validity confirmation is only available if the `confirmedAvai` bit in the UBX-NAV-PVT message is set.

☞ `validDate` means that the receiver has knowledge of the current date. However, it must be noted that this date might be wrong for various reasons. Only when the `confirmedDate` flag is set, the probability of the incorrect date information drops significantly.

☞ `validTime` means that the receiver has knowledge of the current time. However, it must be noted that this time might be wrong for various reasons. Only when the `confirmedTime` flag is set, the probability of incorrect time information drops significantly.

☞ `fullyResolved` means that the UTC time is known without full seconds ambiguity. When deriving UTC time from GNSS time the number of leap seconds must be known, with the exception of GLONASS. It might take several minutes to obtain such information from the GNSS payload. When the one second ambiguity has not been resolved, the time accuracy is usually in the range of ~20s.

3.9.6 UTC representation

UTC time is used in many NMEA and UBX messages. In NMEA messages it is always reported rounded to the nearest hundredth of a second. Consequently, it is normally reported with two decimal places (e.g. 124923.52). Although compatibility mode (selected using CFG-NMEA-COMPAT) requires three decimal places, rounding to the nearest hundredth of a second remains, so the extra digit is always 0.

UTC time is also reported within some UBX messages, such as UBX-NAV-TIMEUTC and UBX-NAV-PVT. In these messages date and time are separated into seven distinct integer fields. Six of these (year, month, day, hour, min and sec) have fairly obvious meanings and are all guaranteed to match the corresponding values in NMEA messages generated by the same navigation epoch. This facilitates simple synchronization between associated UBX and NMEA messages.

The seventh field is called nano and it contains the number of nanoseconds by which the rest of the time and date fields need to be corrected to get the precise time. So, for example, the UTC time 12:49:23.521 would be reported as: hour: 12, min: 49, sec: 23, nano: 521000000.

It is however important to note that the first six fields are the result of rounding to the nearest hundredth of a second. Consequently the nano value can range from -5000000 (i.e. -5 ms) to +994999999 (i.e. nearly 995 ms).

When the nano field is negative, the number of seconds (and maybe minutes, hours, days, months or even years) will have been rounded up. Therefore, some or all of them must be adjusted in order to get the correct time and date. Thus in an extreme example, the UTC time 23:59:59.9993 on 31st December 2011 would be reported as: year: 2012, month: 1, day: 1, hour: 0, min: 0, sec: 0, nano: -700000.

Of course, if a resolution of one hundredth of a second is adequate, negative nano values can simply be rounded up to 0 and effectively ignored.

The UBX-NAV-TIMEUTC message gives information about UTC time reference clock.

The preferred variant of UTC time can be specified using CFG-NAVSPG-UTCSTANDARD configuration item.

☞ UTC time is derived directly from the GNSS time scale, which in turn is realized by the receiver's navigation solution. The derivation of the UTC time includes various parameters that are having their own errors which are then added on top of receiver's navigation solution error. Because of that, UTC time is not recommended to be used in high accuracy timing applications. The best timing accuracy and stability is achieved when receiver outputs GNSS time scale rather than UTC.

3.9.7 Leap seconds

Occasionally it is decided (by one of the international time keeping bodies) that, due to the slightly uneven spin rate of the Earth, UTC has moved sufficiently out of alignment with mean solar time (i.e. the Sun no longer appears directly overhead at 0 longitude at midday). A "leap second" is therefore announced to bring UTC back into close alignment. This normally involves adding an extra second to the last minute of the year, but it can also happen on 30th June. When this happens UTC clocks are expected to go from 23:59:59 to 23:59:60 and only then on to 00:00:00.

It is also theoretically possible to have a negative leap second, in which case there will only be 59 seconds in a minute and 23:59:58 will be followed by 00:00:00.

u-blox receivers are designed to handle leap seconds in their UTC output and consequently users processing UTC times from either NMEA or UBX messages should be prepared to handle minutes that are either 59 or 61 seconds long.

Leap second information can be polled from the u-blox receiver with the message UBX-NAV-TIMELS.

3.9.8 Real-time clock

u-blox receivers contain circuitry to support a real-time clock, which (if correctly fitted and powered) keeps time while the receiver is otherwise powered off. When the receiver powers up, it attempts to

use the real-time clock to initialize receiver local time and in most cases this leads to appreciably faster first fixes.

3.9.9 Date

All GNSS frequently transmit information about the current time within their data message. In most cases, this is a time of week (often abbreviated to TOW), which indicates the elapsed number of seconds since the start of the week (midnight Saturday/Sunday). In order to map this to a full date, it is necessary to know the week and so the GNSS also transmit a week number, typically every 30 seconds. Unfortunately the GPS L1C/A data message was designed in a way that only allows the bottom 10 bits of the week number to be transmitted. This is not sufficient to yield a completely unambiguous date as every 1024 weeks (a bit less than 20 years), the transmitted week number value "rolls over" back to zero. Consequently, GPS L1 receivers cannot tell the difference between, for example, 1980, 1999 or 2019 etc.

Fortunately, although BeiDou and Galileo have similar representations of time, they transmit sufficient bits for the week number to be unambiguous for the foreseeable future (the first ambiguity will be in 2078 for Galileo and not until 2163 for BeiDou). GLONASS has a different structure, based on a time of day, but again transmits sufficient information to avoid any ambiguity during the expected lifetime of the system (the first ambiguous date will be in 2124). Therefore, u-blox 9 receivers using Protocol Version 24 and above regard the date information transmitted by GLONASS, BeiDou and Galileo to be unambiguous and, where necessary, use this to resolve any ambiguity in the GPS date.

☞ Customers attaching u-blox receivers to simulators should be aware that GPS time is referenced to 6th January 1980, GLONASS to 1st January 1996, Galileo to 22nd August 1999 and BeiDou to 1st January 2006; the receiver cannot be expected to work reliably with signals simulated before these dates.

3.9.9.1 GPS-only date resolution

In circumstances where only GPS L1C/A signals are available and for receivers with earlier firmware versions, the receiver establishes the date by assuming that all week numbers must be at least as large as a reference rollover week number. This reference rollover week number is hard-coded at compile time and is normally set a few weeks before the software is completed, but it can be overridden by CFG-NAVSPG-WKNROLLOVER configuration item to any value the user wishes.

The following example illustrates how this works: Assume that the reference rollover week number set in the firmware at compile time is 1524 (which corresponds to a week in calendar year 2009, but would be transmitted by the satellites as 500). In this case, if the receiver sees transmissions containing week numbers in the range of 500 ... 1023, these will be interpreted as week numbers 1524 ... 2047 (calendar year 2009 ... 2019), whereas transmissions with week numbers from 0 to 499 are interpreted as week numbers 2048 ... 2547 (calendar year 2019 ... 2028).

☞ It is important to set the reference rollover week number appropriately when supplying u-blox receivers with simulated signals, especially when the scenarios are in the past.

3.10 Timing functionality

In addition to positioning and navigation applications, GNSS signals are widely used as low-cost precision time or frequency references used by remote or distributed wireless communication, industrial, financial, and power distribution equipment. By capitalizing on atomic clocks which are on-board positioning satellites, GNSS signals which contain embedded timing information can be used to synchronize equipment, as well as to provide UTC time. For wireless communication

standards that utilize Time Division Multiplex (TDM) and applications such as femtocell base stations, a precision time reference is mandatory.

3.10.1 TIME mode

TIME mode is a special receiver mode where the position of the receiver is known and fixed and only the time and frequency is calculated using all available satellites. This mode allows for maximum time accuracy, for single-SV solutions, and also for using the receiver as a stationary reference station.

In order to use TIME mode, the receiver's position must be known as exactly as possible. Errors in the fixed position will translate into time errors depending on the satellite constellation.

The following procedures can be used to initialize the timing receiver position:

- Using built-in survey-in procedure to estimate the position.
- Entering coordinates independently generated or taken from an accurate position such as a survey marker.

3.10.1.1 Survey-in

Survey-in is a procedure that is carried out prior to entering TIME mode. It estimates the receiver position by building a weighted mean of all valid 3D position solutions.

Two major parameters are required when configuring:

- A **minimum observation** time defines the minimum observation time independent of the actual number of fixes used for the position estimate. Values can range from one day for high accuracy requirements to a few minutes for coarse position determination.
- A **3D position standard deviation** defines a limit on the spread of positions that contribute to the calculated mean.

Survey-in ends when both requirements are successfully met. The receiver will automatically change from 3D navigation mode to TIME mode when survey-in is successfully completed. The Survey-in status can be queried using the UBX-TIM-SVIN message.

☞ The timing receiver should not be fed RTCM corrections while it is in survey-in mode.

To configure a timing receiver into Survey-in mode (CFG-TMODE-MODE=SURVEY_IN), the following items are required:

Configuration item	Description
CFG-TMODE-MODE	Receiver mode (disabled, survey-in or fixed)
CFG-TMODE-SVIN_MIN_DUR	Survey-in minimum duration
CFG-TMODE-SVIN_ACC_LIMIT	Survey-in position accuracy limit. The accuracy of given coordinates in 0.0001 meters (i.e. value 100 equals 1 cm)

Table 21: Configuration items used for setting a timing receiver into Survey-in mode

☞ Set the configuration items shown above into flash memory to perform a survey-in procedure automatically on startup.

3.10.1.2 Fixed position

Here the timing receiver position coordinates are entered manually. Any error in the timing receiver position will directly translate into timing errors.

To configure the receiver into TIME mode (CFG-TMODE-MODE=FIXED), the following items are relevant:

Configuration item	Description
CFG-TMODE-MODE	Receiver mode (disabled or survey-in or fixed)
CFG-TMODE-POS_TYPE	Determines whether the ARP position is given in ECEF or LAT/LON/HEIGHT
CFG-TMODE-ECEF_X	ECEF X coordinate of the ARP position, coordinate in centimeters
CFG-TMODE-ECEF_Y	ECEF Y coordinate of the ARP position, coordinate in centimeters
CFG-TMODE-ECEF_Z	ECEF Z coordinate of the ARP position, coordinate in centimeters
CFG-TMODE-LAT	Latitude of the ARP position, coordinate in 1e-7 degrees
CFG-TMODE-LON	Longitude of the ARP position, coordinate in 1e-7 degrees
CFG-TMODE-HEIGHT	Height of the ARP position, coordinate in centimeters
CFG-TMODE-ECEF_X_HP	High-precision ECEF X coordinate of the ARP position, coordinate in 0.1 millimeters
CFG-TMODE-ECEF_Y_HP	High-precision ECEF Y coordinate of the ARP position, coordinate in 0.1 millimeters
CFG-TMODE-ECEF_Z_HP	High-precision ECEF Z coordinate of the ARP position, coordinate in 0.1 millimeters
CFG-TMODE-LAT_HP	High-precision latitude of the ARP position, coordinate in 1e-9 degrees
CFG-TMODE-LON_HP	High-precision longitude of the ARP position, coordinate in 1e-9 degrees
CFG-TMODE-HEIGHT_HP	High-precision height of the ARP position, coordinate in 0.1 millimeters
CFG-TMODE-FIXED_POS_ACC	Fixed position 3D accuracy estimate

Table 22: Configuration items used for setting a timing receiver into fixed mode

Once the receiver is set in fixed mode, select the position format to use: either LLH or ECEF with optional high precision (mm) coordinates compared to the standard cm value.

For example, with CFG-TMODE-POS_TYPE=ECEF the timing receiver antenna position can be entered to cm precision using CFG-TMODE-ECEF_X, CFG-TMODE-ECEF_Y, CFGTMODE-ECEF_Z. For high precision (mm) coordinates use CFG-TMODEECEF_X_HP, CFG-TMODE-ECEF_Y_HP, CFG-TMODE-ECEF_Z_HP. The same applies with corresponding coordinates used with CFG-TMODE-POS_TYPE=LLH.

☞ Once the fixed coordinates are known, it is possible to store them into flash memory to start the receiver directly into TIME mode.

⚠ If the timing receiver is moved then new position coordinates must be configured.

⚠ When the receiver is in TIME mode, all the position related DOP values (PDOP, VDOP, HDOP, NDOP, EDOP) are meaningless and reported as 99.99.

3.10.2 Time pulse

3.10.2.1 Introduction

The ZED-F9T receiver includes two time pulse outputs with configurable duration and frequency. The time pulse function can be configured using the CFG-TP-* configuration group for the desired time pulse; TP1 or TP2. The UBX-TIM-TP message provides time information for the next pulse, time source and the quantization error of the output pin.

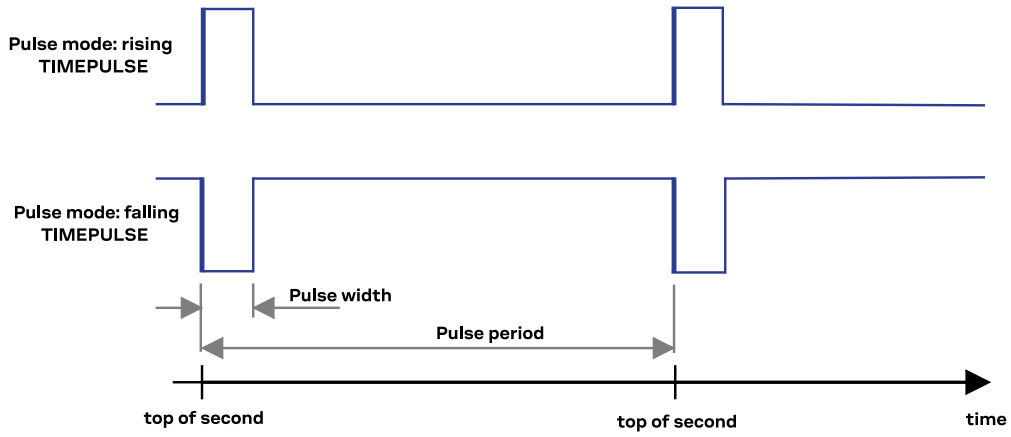

Figure 17: Time pulse

3.10.2.2 Recommendations

- The time pulse can be aligned to a wide variety of GNSS times or to variants of UTC derived from them (see the section on time bases). However, it is strongly recommended that the choice of time base is aligned with the available GNSS signals (so to produce GPS time or UTC(USNO), ensure GPS signals are available, and for Galileo time or UTC(EU) ensure the presence of Galileo signals, etc). This will involve coordinating the setting of CFG-SIGNAL-* configuration group with the choice of time pulse time base.
- When using time pulse for timing applications requiring absolute time accuracy, e.g. with requirements specifying offset to UTC, it is recommended to calibrate the user's full setup for TP output against a reference timing source. To achieve best absolute and consistent accuracy (e.g. for mass deployment), it is recommended that the user should calibrate each single setup and calibrate under different GNSS modes and different temperatures which are applicable to the user's application and operating requirements. The user should take the calibrated values and configure the compensation accordingly (see the section on Time pulse configuration)
- To get the best timing accuracy with the antenna, a fixed and *accurate* position is needed.
- If relative time accuracy between multiple receivers is required, do not mix receivers of different product families. If this is required, the receivers must be calibrated accordingly, by setting cable delay and user delay.
- The recommended configuration when using the UBX-TIM-TP message is to set both the measurement rate (CFG-RATE-MEAS) and the time pulse frequency (CFG-TP-*) to 1 Hz.

☞ Since the rate of UBX-TIM-TP is bound to 1 Hz, more than one UBX-TIM-TP message can appear between two pulses if the time pulse frequency is set lower than 1 Hz. In this case all UBX-TIM-TP messages in between time pulses T1 and T2 belong to T2 and the last UBX-TIM-TP before T2 reports the most accurate quantization error. In general, if the time pulse rate is not configured to 1 Hz, there will not be a single UBX-TIM-TP message for each time pulse.

☞ When using SBAS, it is recommended to use the SBAS_IONOONLY mode.

The sequential order of the signal present at the TIMEPULSE pin and the respective output message for the simple case of 1 pulse per second (1PPS) is shown in the following figure.

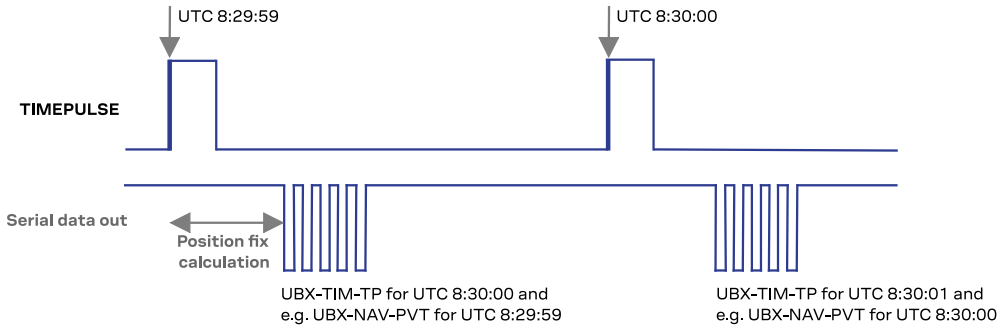

Figure 18: Time pulse and TIM-TP

3.10.2.3 GNSS time bases

GNSS receivers must handle a variety of different time bases as each GNSS has its own reference system time. What is more, although each GNSS provides a model for converting their system time into UTC, they all support a slightly different variant of UTC. So, for example, GPS supports a variant of UTC as defined by the US National Observatory, while BeiDou uses UTC from the National Time Service Center, China (NTSC). While the different UTC variants are normally closely aligned, they can differ by as much as a few hundreds of nanoseconds.

Although u-blox receivers can combine a variety of different GNSS times internally, the user must choose a single type of GNSS time and, separately, a single type of UTC for input (on EXTINT pins) and output (via the TIMEPULSE pin) and the parameters reported in corresponding messages.

The CFG-TP-TIMEGRID_TP* configuration item allows the user to choose between any of the supported GNSS (Galileo, GPS, BeiDou, etc.) time bases and UTC. Also, the CFG-NAVSPG-UTCSTANDARD configuration item allows the user to select which variant of UTC the receiver should use. This includes an "automatic" option which causes the receiver to select an appropriate UTC version itself, based on the enabled GNSS constellations. For firmware versions prior to TIM 2.24, the order of preference is:

- USNO if GPS is enabled
- SU if GLONASS is enabled
- NTSC if BeiDou is enabled
- European if Galileo is enabled
- NPLI if NAVIC is enabled

For TIM 2.24 and later firmware releases, the order of preference is:

- European if Galileo is enabled
- USNO if GPS is enabled
- NTSC if BeiDou is enabled
- NPLI if NAVIC is enabled

The receiver will assume that an input time pulse uses the same GNSS time base as specified for the time pulse output. So, if the user selects Galileo time for time pulse output, any time pulse input must also be aligned to Galileo time (or to the separately chosen variant of the UTC). When UTC is selected for the time pulse output, any GNSS time pulse input must be aligned to GPS time.

☞ u-blox receivers allow users to independently choose GNSS signals used in the receiver (using CFG-SIGNAL-*) and the input/output time base (using CFG-TP-*). For example, it is possible to instruct the receiver to use GPS and Galileo satellite signals to generate BeiDou time.

This practice will compromise time pulse accuracy if the receiver cannot measure the timing difference between the constellations directly and is therefore not recommended.

☞ The information that allows GNSS times to be converted to the associated UTC times is only transmitted by the GNSS at relatively infrequent periods. For example GPS transmits UTC(USNO) information only once every 12.5 minutes. Therefore, if a time pulse is configured to use a variant of UTC time, after a cold start, substantial delays before the receiver has sufficient information to start outputting the time pulse can be expected.

3.10.2.4 Time pulse configuration

u-blox ZED-F9T receivers provide a time pulse (TIMEPULSE) signal with a configurable pulse period, length and polarity (rising or falling edge).

It is possible to define different signal behavior (i.e. output frequency and pulse length) depending on whether or not the receiver is locked to a reliable time source. Time pulse signal can be configured using the configuration group CFG-TP-*.

3.10.2.5 Configuring time pulse with CFG-TP-*

The configuration group CFG-TP-* can be used to change the time pulse settings, and includes the following parameters defining the pulse:

- **timepulse enable** - If this item is set, the time pulse is active.
- **frequency/period type** - Determines whether the time pulse is interpreted as frequency or period.
- **length/ratio type** - Determines whether the time pulse length is interpreted as length [us] or pulse ratio [%].
- **antenna cable delay** - Signal delay owning to RF components (e.g. antenna, cable, and splitter etc.) before the receiver input. This delay parameter affects the receiver calculation of GNSS time and it is used to compensate for the signal transit time prior to the receiver and any uncompensated delay from the receiver; a positive value compensates this delay, i.e. advances the time pulse
- **pulse frequency/period** - Frequency or pulse time period when locked mode is not configured or active.
- **pulse frequency/period lock** - Frequency or pulse time period, as soon as the receiver has calculated a valid time from a received signal. Only used if the corresponding item is set to use another setting in locked mode.
- **pulse length/ratio** - Length or duty cycle of the generated pulse, either specifies a time or ratio for the pulse to be on/off.
- **pulse length/ratio lock** - Length or duty cycle of the generated pulse, as soon as the receiver has calculated a valid time from a received signal. Only used if the corresponding item is set to use another setting in locked mode.
- **user delay** - A time offset of the TP output for adjustment in a user application. It adjusts the time pulse position only with respect to GNSS time. Configuring a positive value will add a delay, i.e. retard the pulse with respect to GNSS time. Conversely, a negative value will advance the pulse. This configuration is available for all supported TP outputs.
- **lock to GNSS freq** - If this item is set, uses the frequency gained from the GNSS signal information rather than the local oscillator's frequency.
- **locked other setting** - If this item is set, the alternative setting will be used as soon as the receiver can calculate a valid time. This mode can be used, for example, to disable time pulse if the time is not locked, or to indicate a lock with different duty cycles.
- **align to TOW** - If this item is set, pulses are aligned to the top of a second.
- **polarity** - If set, the first edge of the pulse is a rising edge (pulse polarity: rising).

- **grid UTC/GNSS** - Selection between UTC and various GNSS time grids. Also affects the time output by UBX-TIM-TP message.

☞ The maximum pulse length cannot exceed the pulse period.

☞ Time pulse settings shall be chosen in such a way that neither the high nor the low period of the output is less than 50 ns (except when disabling it completely), otherwise pulses can be lost.

3.10.2.5.1 Example

The example below shows the 1PPS TIMEPULSE signal generated on the time pulse output according to the specific parameters of the CFG-TP-* configuration group:

- **CFG-TP-TP1_ENA** = 1
- **CFG-TP-PULSE_DEF** = 0 (PERIOD)
- **CFG-TP-PULSE_LENGTH_DEF** = 1 (LENGTH)
- **CFG-TP-PERIOD_TP1** = 1 000 000 µs
- **CFG-TP-LEN_TP1** = 100 000 µs
- **CFG-TP-TIMEGRID_TP1** = 1 (GPS)
- **CFG-TP-ALIGN_TO_TOW_TP1** = 1
- **CFG-TP-USE_LOCKED_TP1** = 1
- **CFG-TP-POL_TP1** = 1
- **CFG-TP-PERIOD_LOCK_TP1** = 1 000 000 µs
- **CFG-TP-LEN_LOCK_TP1** = 100 000 µs

The 1 Hz output is maintained whether or not the receiver is locked to GPS time. The alignment to TOW can only be maintained when GPS time is locked.

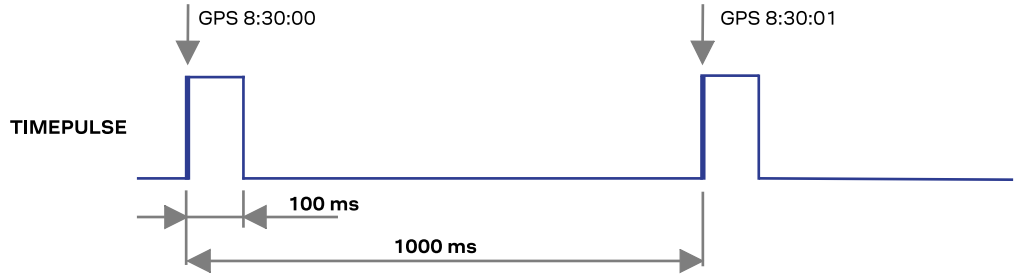

Figure 19: Time pulse signal with the example parameters

3.10.3 Time mark

The receiver can be used to provide an accurate measurement of the time at which a pulse was detected on the external interrupt pin. The reference time can be chosen by setting the time source parameter to UTC, GPS, GLONASS, BeiDou, Galileo or local time in the CFG-TP-* configuration group. The UTC standard can be set in the CFG-NAVSPG-* configuration group. The delay figures defined with CFG-TP-* are also applied to the results output in the UBX-TIM-TM2 message.

A UBX-TIM-TM2 message is output at the next epoch if

- The UBX-TIM-TM2 message is enabled, and
- A rising or falling edge was triggered since last epoch on one of the EXTINT channels.

The UBX-TIM-TM2 messages includes the time of the last time mark, new rising/falling edge indicator, time source, validity, number of marks and an accuracy estimate.

☞ Only the last rising and falling edge detected between two epochs is reported since the output rate of the UBX-TIM-TM2 message corresponds to the measurement rate configured with CFG-RATE-MEAS (see Figure 20 below).

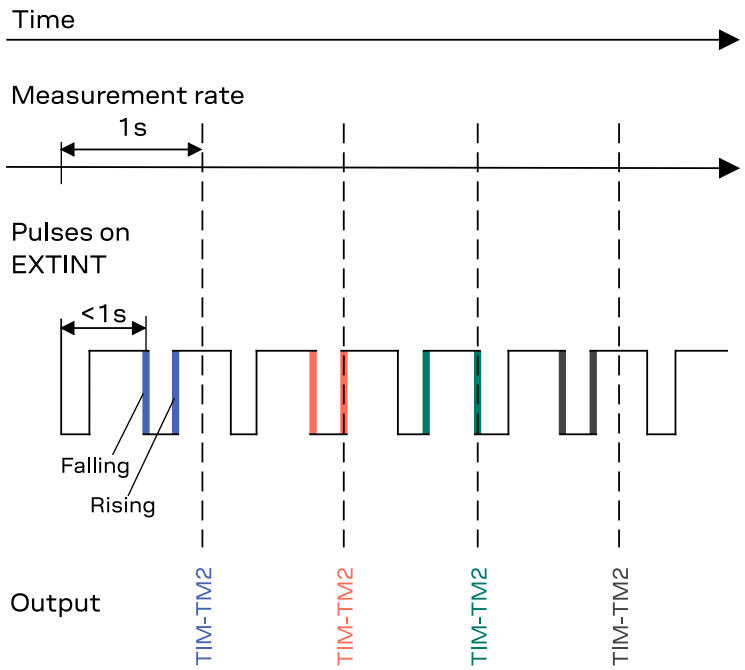

Figure 20: Time mark

3.10.4 Time mark for Common View Time Transfer

Common view time transfer (CVTT) allows comparison of geographically widely spaced clocks by comparing GNSS signal times observed at each location with respect to a time pulse provided, for example, by a site reference clock. The techniques that can be employed are classical common view signal methods or "all in view" where GNSS time is the common factor. In all cases a mechanism is required to provide an estimate of the received signal time (sigtow) coincident with an external time pulse.

The ZED-F9T makes GNSS signal pseudo-range and doppler measurements at nominally 1 ms intervals set by the receiver local time base (rcvTow) and published at the navigation rate in UBX-RXM-RAWX. The UBX-RXM-TM message records the local receiver time (rcvTow) for a pulse applied to the EXTINT input pins. With this information and that obtained from UBX-RXM-RAWX the user can then estimate the pseudo-range for signals at the input pulse time.

Observations using identical ZED-F9T receivers can then be used to compare the difference between, for example, two reference clock PPS signals for time transfer or comparison purposes. Note that reasonable estimates of antenna, cable and interconnection delays will have to be taken into account when making accurate timing measurement comparisons.

The UBX-RXM-TM message provides a set of measurements giving the EXTINT channel (0 or 1) and receiver time (rcvTow) for up to 18 pulses (rising and falling edges).

3.10.5 Differential timing

The u-blox ZED-F9T high accuracy timing receiver takes local timing accuracy to the next level with its differential timing mode.

In differential timing mode correction data is exchanged with other neighboring ZED-F9T timing receivers via a communication network. In differential timing mode the ZED-F9T can operate either as a reference base station, or as a differential timing receiver station.

When ZED-F9T acts as a reference base timing station, it sends RTCM 3.4 differential corrections to differential timing receivers.

When ZED-F9T acts as a differential timing receiver, it receives differential corrections RTCM 3.4 messages and aligns its time pulse to the reference base station.

3.10.6 Differential timing mode configuration

In differential timing mode the ZED-F9T can operate either as a reference base station or as a differential timing receiver station. Using the RTCM3 protocol, the base station sends timing corrections to the differential timing receiver via a communication link enabling the differential timing receiver to compute its time relative to the base station with high accuracy.

This section describes how to configure the ZED-F9T high accuracy timing receiver as a reference base station and as differential timing receiver station. The section begins with a note describing the RTCM protocol and corresponding supported message types.

3.10.6.1 RTCM corrections

RTCM is a standard-based binary protocol for the communication of GNSS correction information. The ZED-F9T high accuracy timing receiver supports RTCM as specified by RTCM 10403.4, Differential GNSS (Global Navigation Satellite Systems) Services – Version 4 (December 1, 2023).

The RTCM specification is currently at version 3.4 (TIM 2.20 supports only upto version 3.3) and RTCM version 2 messages are not supported by this standard.

To modify the RTCM input/output settings, see the configuration section in the applicable Interface description [2].

3.10.6.2 List of supported RTCM input messages

Message type	Description
RTCM 1005	Stationary RTK reference station ARP
RTCM 1077	GPS MSM7
RTCM 1087	GLONASS MSM7
RTCM 1097	Galileo MSM7
RTCM 1127	BeiDou MSM7
RTCM 1230	GLONASS code-phase biases
RTCM 4072.1	Additional reference station information (u-blox proprietary RTCM Message)

Table 23: ZED-F9T supported input RTCM messages

3.10.6.3 List of supported RTCM output messages

Message type	Description
RTCM 1005	Stationary RTK reference station ARP
RTCM 1077	GPS MSM7
RTCM 1087	GLONASS MSM7
RTCM 1097	Galileo MSM7
RTCM 1127	BeiDou MSM7
RTCM 1230	GLONASS code-phase biases

Message type	Description
RTCM 4072.1	Additional reference station information (u-blox proprietary RTCM Message)

Table 24: ZED-F9T supported output RTCM messages

3.10.6.4 Reference base station

When the ZED-F9T high accuracy timing receiver acts as a base timing station, it sends RTCM 3.4 (version 3.3 for TIM 2.20)differential corrections to differential timing receivers. Corrections are generated after a timing fix calculation in order to remove the base receiver's clock offset.

3.10.6.4.1 Reference base station: RTCM output configuration

At this point the timing receiver should report a TIME fix, not a 3D fix.

The desired RTCM messages must be selected and configured on UART1 rate 1:

- RTCM 1005 Stationary RTK reference station ARP
- RTCM 1077 GPS MSM7
- RTCM 1088 GLONASS MSM7
- RTCM 1097 Galileo MSM7
- RTCM 1127 BeiDou MSM7
- RTCM 1230 GLONASS code-phase biases
- RTCM 4072.1 Additional reference station information

The configuration messages for these are shown in the Table 25.

The following configuration items output the recommended messages for a default satellite constellation setting. Note that these are given for the UART1 interface:

Configuration item	Description
CFG-UART1OUTPROT-NMEA	CFG-UART1OUTPROT-NMEA to 0
CFG-UART1OUTPROT-RTCM3X	CFG-UART1OUTPROT-RTCM3X to 1
CFG-UART1OUTPROT-UBX	CFG-UART1OUTPROT-UBX to 0
CFG-MSGOUT-RTCM_3X_TYPE1005_UART1	Output rate of the RTCM-3X-TYPE1005 message on port UART1: RTCM base station message
CFG-MSGOUT-RTCM_3X_TYPE1077_UART1	Output rate of the RTCM-3X-TYPE1077 message on port UART1: RTCM GPS MSM7
CFG-MSGOUT-RTCM_3X_TYPE1087_UART1	Output rate of the RTCM-3X-TYPE1087 message on port UART1: RTCM GLONASS MSM7
CFG-MSGOUT-RTCM_3X_TYPE1097_UART1	Output rate of the RTCM-3X-TYPE1097 message on port UART1: RTCM Galileo MSM7
CFG-MSGOUT-RTCM_3X_TYPE1127_UART1	Output rate of the RTCM-3X-TYPE1127 message on port UART1: RTCM Additional reference station information
CFG-MSGOUT-RTCM_3X_TYPE1230_UART1	Output rate of the RTCM-3X-TYPE1230 message on port UART1: RTCM GLONASS code-phase biases
CFG-MSGOUT-RTCM_3X_TYPE4072_1_UART1	Output rate of the RTCM-3X-TYPE4072.1 message on port UART1: RTCM Additional reference station information

Table 25: Configuration items used for setting a reference base station

3.10.6.5 Differential timing receiver station

When the ZED-F9T acts as a differential timing receiver, it receives differential corrections RTCM 3.4 (version 3.3 for TIM 2.20) messages from a reference base station and aligns its time pulse to it.

Connect the differential timing receiver to the reference server or to the NTRIP server. When the differential timing receiver receives the configured RTCM correction stream, it will automatically start using the corrections.

☞ Reception of RTCM 4072.1 is required to start using differential correction data.

3.11 Security

The security concept of ZED-F9T covers:

- the security of the receiver
- communication between the receiver and the GNSS satellites

Some receiver security functions monitor and detect threats and report them to the host system. Other security functions mitigate threats and allow the receiver to operate normally.

The table below gives an overview about possible threats and which functionality is available to detect and/or mitigate it.

Threat	u-blox solution
Over air signal security	Spoofing detection and monitoring Jamming interference detection and monitoring Galileo Open Service Navigation Message Authentication (OSNMA)
GNSS receiver security	Secure boot Secure firmware update Receiver configuration lock

Table 26: u-blox security options

3.11.1 Spoofing detection and monitoring

Spoofing is the process where a counterfeit GNSS signal is transmitted locally to deceive the receiver/user and produce an erroneous position fix and/or time solution.

The detection algorithm monitors GNSS signals for implausible changes or inconsistencies.These are evaluated with regards to spoofing. The known location of the static antenna improves the spoofing detection process built in the receiver.

Certain spoofing detection mechanisms rely on signal transition from an initially genuine one to a spoofed version. Hence, detection is not possible if the receiver is started under spoofing conditions. The detection algorithms also rely on availability of signals from multiple GNSS constellations to improve the spoofing detection capabilities.

In addition, the receiver provides a secondary navigation solution output to aid detection of spoofing attacks in stationary use cases. To achieve this, the primary output is configured to operate normally in the stationary time mode, whereas the secondary output is operated in 3D navigation mode providing live antenna coordinates. This allows the host system to detect any suspicious antenna motion which in a stationary application may indicate spoofing attack. See Primary and secondary output section for more details.

3.11.2 Jamming and interference detection and monitoring

Intentional and/or unintentional jamming of GNSS receivers can degrade the quality of GNSS signals and receiver performance. All u-blox receivers can detect and monitor jamming and report it to the user. The monitoring function is always enabled to inform the user about interference in the GNSS RF bands.

☞ In case of excessive false jamming alerts, the jamming detector sensitivity can be configured with the CFG-SEC-JAMDET_SENSITIVITY_HI configuration.

☞ Additionally, ZED-F9T provides a spectrum analyzer function for monitoring the spectrum of the incoming RF signal to detect and analyze potential interference and jamming events. See Spectrum analyzer section for more details.

3.11.3 Spoofing and jamming indication

The UBX-SEC-SIG message provides a direct method for monitoring the current security status at each navigation epoch to alert the host about potential jamming or spoofing events.

The UBX-SEC-SIGLOG message provides a log of past events triggered by jamming or spoofing detection.

Each event is a combination of a detection type and an event type, where the event type 'indication started' and 'indication stopped' and also the event type 'indication triggered' and 'indication timeout' form a pair.

A maximum of 16 events are logged and new events take precedence over the past events in the log. Power cycles and restarts of the receiver reset the log, deleting its content.

See the applicable Interface description [2].

3.11.4 GNSS receiver security

3.11.4.1 Secure boot

The ZED-F9T boots only with firmware images that are signed by u-blox. This prevents the execution of non-genuine firmware images on the receiver.

3.11.4.2 Secure firmware update

The firmware image is signed by u-blox. The ZED-F9T verifies the signature during the firmware update.

3.11.4.3 Receiver configuration lock

The receiver configuration lock feature ensures that no configuration changes are possible once the feature is enabled. The configuration lock is enabled by setting the configuration item CFG-SEC-CFG_LOCK to "true".

The configuration lock can be applied to different configuration layers including the RAM, BBR, and flash memory. At startup, the receiver constructs the configuration database from different configuration layers and maintains it in the run-time RAM memory. When the configuration lock is set in the run-time RAM, the receiver configuration cannot be changed on any configuration layer.

☞ For more information on the configuration layers including the order of priority they are applied in, see the applicable interface description [2].

The configuration lock set on a configuration layer in volatile memory (RAM, BBR) is removed when the memory is cleared. However, the configuration lock set in non-volatile memory (flash memory) is permanent apart from one exception: during firmware upload to flash memory, the flash is erased during the process causing the configuration lock to be cleared. Refer to Firmware upload for more information on firmware update.

To test the lock functionality, set it on the RAM configuration layer. After a power cycle, the information on RAM layer is cleared and the lock is no longer set.

☞ It is recommended to apply the configuration lock on the same layer the configuration is stored.

An example of use case is that the host application locks the receiver configuration. A user communicating with the ZED-F9T through any of the available interfaces can poll, enable or send messages, but cannot change the configuration by sending UBX configuration messages.

3.11.5 Galileo Open Service Navigation Message Authentication (OSNMA)

☞ This feature is available as of firmware version TIM 2.24.

Open Service Navigation Message Authentication (OSNMA) is a free data authentication service for Galileo Open Service users worldwide. It allows users to confirm that the received Galileo OS navigation data originates from the Galileo system itself and has not been modified. It serves as a strong layer of protection in detecting various spoofing attacks and delayed attacks, also known as meaconing or record-and-replay attacks.

The OSNMA protocol data is transmitted in the previously reserved fields of the Galileo I/NAV message broadcasted on the E1B signal component. As the OSNMA data uses previously reserved fields of the I/NAV message, it is fully backwards compatible. Legacy receivers function with the same performance by simply ignoring the OSNMA fields of I/NAV message.

ZED-F9T also supports cross-authentication. This means that the receiver can authenticate navigation messages from both the Galileo satellites which transmit and don't transmit the OSNMA protocol data, the receiver utilizes the data retrieved from the satellites transmitting OSNMA data.

3.11.5.1 Cryptographic keys

The cryptographic keys which the OSNMA security relies on, namely the Public Key and the Merkle tree root, are not factory installed. They need to be provisioned securely to the receiver and it is crucial to protect the integrity and authenticity of the these keys.

Public Key:

The Public Key is used to verify the TESLA chain provided within the Digital Signature Message of the OSNMA protocol data. The Public Key is transmitted in the I/NAV data of the E1B signal every 6 hours for 30 minutes starting at 00:00 GST. Alternatively, the Public Key can be retrieved as an xml file from the GSC web portal. The host system can provide it to the receiver.

Merkle tree root:

The Merkle tree root is used to verify the alert messages and Public Keys transmitted over the signal in space. It is only available as a Merkle tree xml file from the GSC web portal, not as a signal in space.

3.11.5.2 Downloading the OSNMA cryptographic keys

To download the Public Key and Merkle tree root, register at the European GNSS Service Center (GSC) web portal (https://www.gsc-europa.eu). Subscribe to the OSNMA products and after that has been confirmed, download the Public Key and Merkle tree xml files from the GSC PRODUCTS menu.

☞ The interface to the GSC OSNMA Server is specified in the Galileo Open Service Navigation Message Authentication (OSNMA) Internet Data Distribution (IDD) Interface Control Document (https://www.gsc-europa.eu/sites/default/files/sites/all/files/Galileo_OSNMA_IDD_ICD_v1.1.pdf).

3.11.5.3 Sending the OSNMA cryptographic keys to the receiver

See Table 27 for the cryptographic key messages related to the OSNMA feature. For more details, refer to the Interface description [2].

OSNMA Cryptographic keys	Description
UBX-MGA-GAL-OSNMA_PUBKEY	To avoid waiting for the Public Key to be transmitted in the signal, it can be sent to the receiver with the UBX-MGA-GAL-OSNMA_PUBKEY message. This message requires the corresponding Public Key ID (PKID), the hash function with which the Public Key is hashed (Example: SHA-256 or SHA-512), the actual hexadecimal Public Key point which can be found in the Public Key xml file downloaded from the GSC web portal.
UBX-MGA-GAL-OSNMA_MERKLE	Use this message to send the OSNMA Merkle tree root to the receiver. This message requires the applicability time of the Merkle tree root (current or future), and the hexadecimal Merkle tree root which can be found in the Merkle tree xml file. The current and future applicability time of the Merkle tree root is used during the Merkle tree renewal process. The future Merkle tree root will be published in the GSC web portal 2 years prior to the renewal.

Table 27: OSNMA cryptographic key messages

☞ ZED-F9T does not contain factory installed cryptographic keys. Therefore, ensure the receiver always has the current valid keys, even after a Public Key and/or Merkle tree renewal event.

☞ The Public Key and Merkle tree root are sent from the host to the receiver over the host communication interface and stored in the non-volatile storage. During this process both keys are unprotected. To protect the keys, the host system must prevent unauthorized access to the system.

3.11.5.4 Storing the cryptographic keys on the receiver

The cryptographic keys sent to the receiver are stored in the non-volatile storage (NVS) on the receiver and they are retained after a power-down event.

If the Public Key stored in the NVS has expired, it is replaced with the one retrieved from the Galileo signal if the Merkle tree root available on the receiver is still valid.

If both the Public Key and the Merkle tree root stored in the NVS have expired, both keys must be updated by the host.

3.11.5.5 Trusted time

To detect delayed attacks, an OSNMA-capable receiver cannot trust on the time decoded from the Galileo satellites. Therefore, the host needs to provide the trusted time. This is compared to the time which the receiver decodes from the Galileo satellites. If the difference between the time decoded from the satellites and the trusted time provided by the host is:

- < 15 sec: OSNMA uses fast MACs (Message Authentication Codes) which is the normal OSNMA operation.
- 15 – 165 sec: OSNMA uses slow MACs. It takes longer to authenticate Galileo navigation data than using fast MACs.
- >= 165 sec: OSNMA will not be performed.

3.11.5.6 Providing trusted time to the receiver

See Table 28 for the messages related to Trusted time. For more details, refer to the Interface description [2].

Trusted time messages	Description
UBX-MGA-INI-TIME_UTC UBX-MGA-INI_TIME_GNSS	These messages can be used to provide trusted time either in UTC or GNSS time, respectively. Both messages allow to provide a trusted flag to the time.

Table 28: Trusted time messages

To protect the integrity of the trusted time provided by the host, it is propagated by the receiver using an internal free-running TCXO. This ensures the trusted time is completely independent from the Galileo satellite data. Due to the imperfections of the TCXO, the propagated trusted time accuracy will degrade over time.

See Table 29 for the items related to Trusted time propagation. For more details, refer to the Interface description [2].

Trusted time propagation	Description
UBX-NAV-TIMETRUSTED	Provides information about the current propagated trusted time accuracy.

Table 29: Trusted time propagation messages

The host system must monitor the propagated trusted time accuracy from the UBX-NAV-TIMETRUSTED message and periodically provide the trusted time to the receiver to maintain the accuracy within 15 seconds to avoid fall back to slow MACs or even losing OSNMA operation altogether.

3.11.5.7 Configuring OSNMA

See Table 30 for the configuration messages related to the OSNMA feature. For more details, refer to the Interface description [2].

OSNMA Configuration	Description
CFG-GAL-USE_OSNMA	Enables the execution of OSNMA.
CFG-GAL-OSNMA_TIMESYNC	Enables trusted time synchronization requirement for the OSNMA. By default, set to true as instructed by the OSNMA Receiver Guidelines.
CFG-NAVSPG-ONLY_AUTHDATA CFG-NAV2-NAVSPG_ONLY_AUTHDATA	When enabled, navigation uses only signals with authenticated navigation data.
CFG-GAL-OSNMA_INAVPRIM	Use authenticated I/NAV as primary data source over non-authenticated FNAV in E1-E5a configuration.
CFG-GAL-OSNMA_MINTAGLENGTH	The minimum tag length that defines the number of times the data needs to be authenticated before declaring it authenticated.

Table 30: OSNMA configuration messages

3.11.5.8 Verifying OSNMA

See Table 31 for the messages that give information about the status of the OSNMA processing in the receiver. For more details, refer to the Interface description [2].

OSNMA Verification messasges	Description
UBX-SEC-OSNMA	Provides information related to the status and execution of the OSNMA protocol. The latest authentication service status and configuration. The total number of satellites transmitting the OSNMA protocol data and the authentication results per satellite are reported periodically. The status of Digital Signature Message authentication. TESLA key authentication. Time synchronization. The difference between the propagated trusted time and the time decoded from the Galileo navigation data.
UBX-NAV-SIG	Includes an additional field to indicate the authentication status of the navigation data used to compute the satellite's position in the current epoch per signal.

OSNMA Verification messasges	Description
UBX-NAV-PVT	Indicates if the PVT fix has been verified with the NMA data. The nmaFixStatus flag is set to 1, indicating the PVT fix has been verified. Indicates if the output time has been validated against the external trusted time source. If the difference between the receiver estimated time and the external trusted time provided by the host is smaller than the threshold configured with the CFG-NAVSPG-MAX_TIMETRUSTED_ACC message, the authTime flag is set to 1, meaning time has been authenticated.
UBX-NAV-TIMEUTC	Indicates if the parameters used to convert GNSS time into UTC time have been authenticated. As the Galileo OSNMA protocol provides the data authentication function only for the I/NAV message of the E1B signal, only UTC(EU) and UTC(USNO) can be authenticated.

Table 31: OSNMA verification messages

3.12 u-blox protocol feature descriptions

3.12.1 Broadcast navigation data

This section describes the data reported via UBX-RXM-SFRBX.

UBX-RXM-SFRBX reports the broadcast navigation data message the receiver has collected from each tracked signal. When enabled, a separate message is generated each time the receiver decodes a complete subframe of data from a tracked signal. The data bits are reported as received, including preambles and error checking bits as appropriate. However, because there is considerable variation in the data structure of the different GNSS signals, the form of the reported data also varies. This document uses the term "subframe", but other GNSS data structures might use different terms, for example, GLONASS uses "strings" and Galileo uses "pages".

3.12.1.1 Parsing navigation data subframes

Each UBX-RXM-SFRBX message contains a subframe of data bits appropriate for the relevant GNSS, delivered in a number of 32-bit words, as indicated by numWords field.

Due to the variation in data structure between different GNSS, the most important step in parsing a UBX-RXM-SFRBX message is to identify the form of the data. This should be done by reading the gnssId field, which indicates which GNSS the data was decoded from. In almost all cases, this is sufficient to indicate the structure. Because of this, the following sections are organized by GNSS. However, in some cases the identity of the GNSS is not sufficient, and this is described, where appropriate, in the following sections.

In most cases, the data does not map perfectly into a number of 32-bit words and, consequently, some of the words reported in UBX-RXM-SFRBX messages contain fields marked as "Pad". These fields should be ignored and no assumption should be made about their contents.

UBX-RXM-SFRBX messages are only generated when complete subframes are detected by the receiver and all appropriate parity checks have passed.

Where the parity checking algorithm requires data to be inverted before it is decoded (e.g. GPS L1C/A), the receiver carries this out before the message output. Therefore, users can process data directly and do not need to worry about repeating any parity processing.

The meaning of the content of each subframe depends on the sending GNSS and is described in the relevant interface control documents (ICD).

3.12.1.2 GPS

The data message structure in the GPS L1C/A (LNAV) and L2C/L5 (CNAV) signals is different and thus the UBX-RXM-SFRBX message structure differs as well. For the GPS L1C/A and L2C/L5 signals it is as follows:

3.12.1.2.1 GPS L1C/A

For GPS L1C/A signals, there is a fairly straightforward mapping between the reported subframe and the structure of subframe and words described in the GPS ICD. Each subframe comprises ten data words, which are reported in the same order they are received.

Each word is arranged as follows:

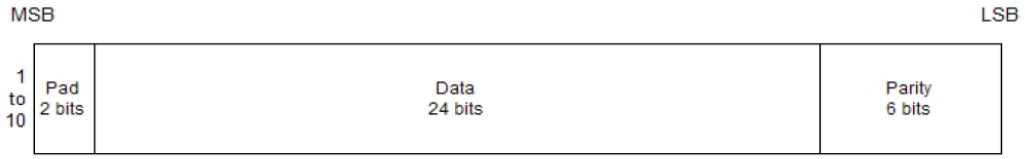

Figure 21: GPS L1C/A subframe word

3.12.1.2.2 GPS L2C

For GPS L2C signals each reported subframe contains the CNAV message as described in the GPS ICD. The ten words are arranged as follows:

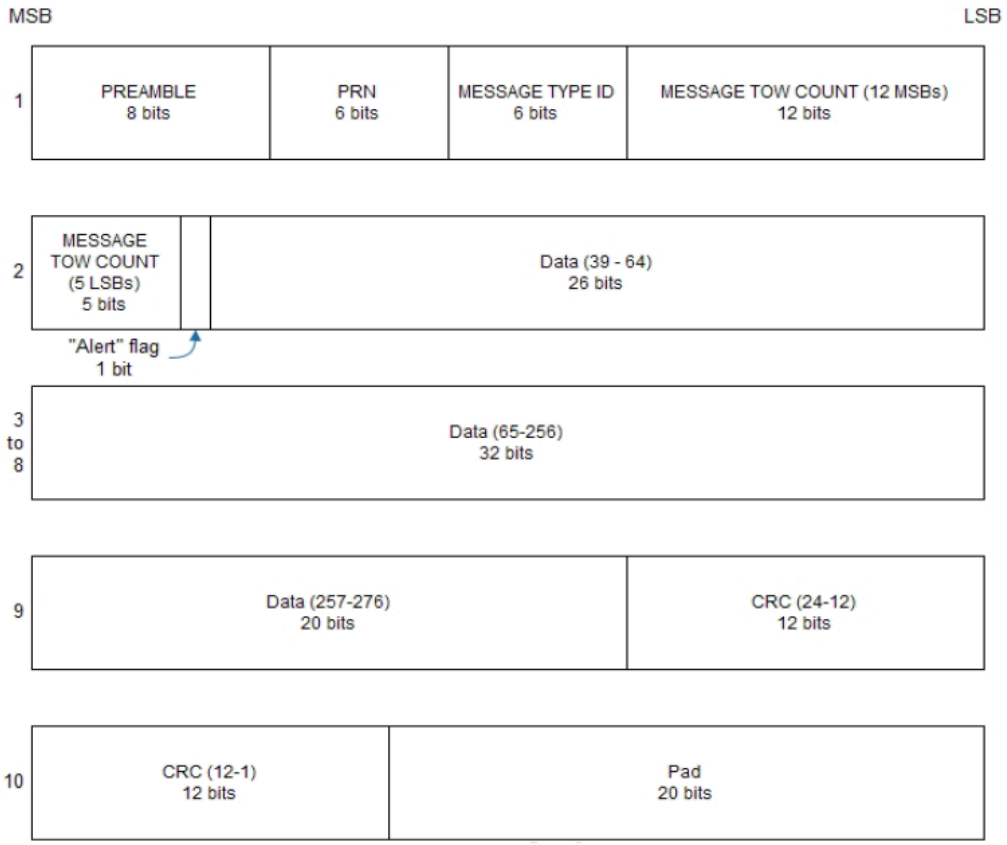

Figure 22: GPS L2C subframe words

3.12.1.2.3 GPS L5

For GPS L5 signals each reported subframe contains the CNAV message as described in the GPS ICD. The ten words are arranged as follows:

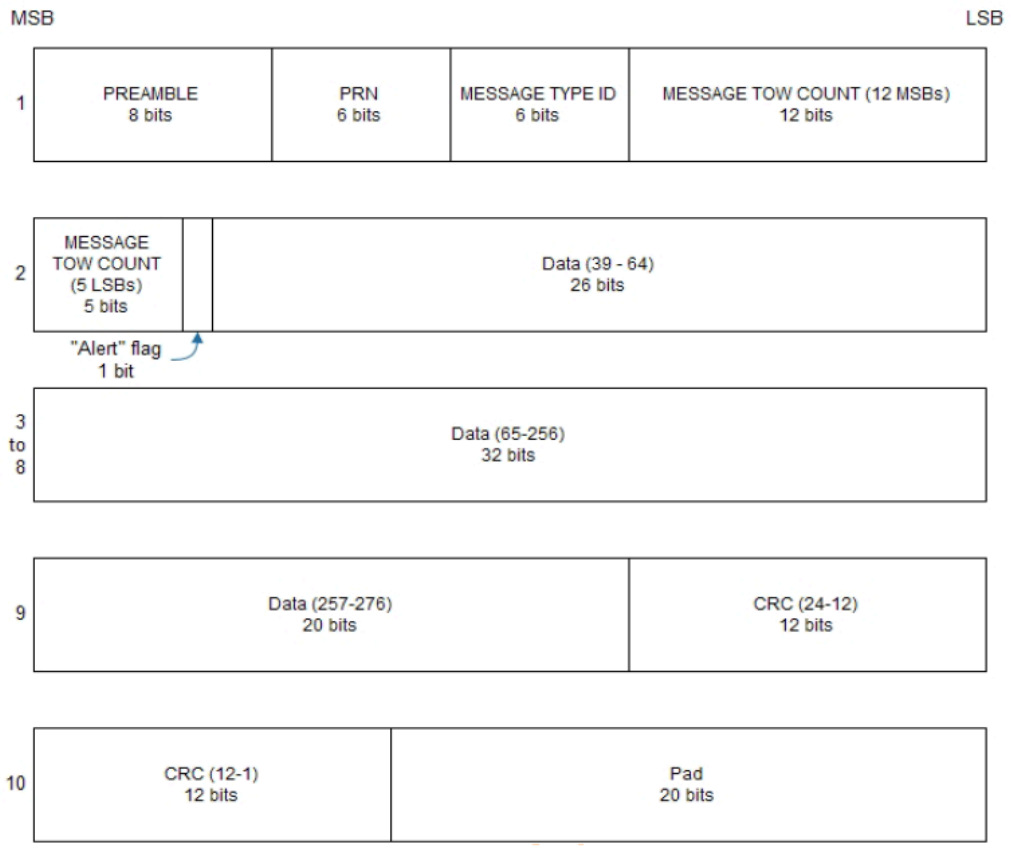

Figure 23: GPS L5 subframe words

3.12.1.3 GLONASS

For GLONASS L1OF signal, the UBX-RXM-SFRBX message contains a string content within the frame structure as described in the GLONASS ICD. This string comprises 85 data bits which are reported over three 32-bit words in the message. Data bits 1 to 8 are always a hamming code, while bits 81 to 84 are a string number and bit 85 is the idle chip, which should always have a value of zero. The meaning of other bits varies with string and frame number.

The fourth and final 32-bit word in the UBX-RXM-SFRBX message contains frame and superframe numbers (where available). These values are not actually transmitted by the satellites, but are deduced by the receiver and are included to aid decoding of the transmitted data. However, the receiver does not always know these values, in which case a value of zero is reported.

The GLONASS words are arranged as follows:

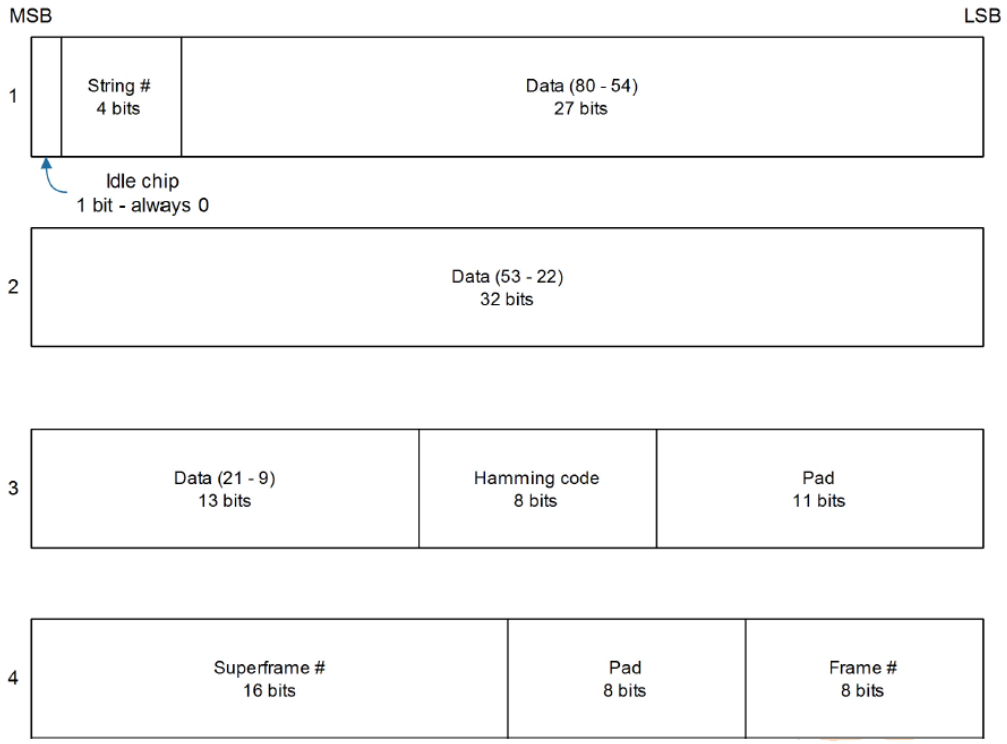

Figure 24: GLONASS navigation message data

In some circumstances, (especially on startup) the receiver may be able to decode data from a GLONASS satellite before it can identify it. When this occurs UBX-RXM-SFRBX messages will be issued with an svId of 255 to indicate "unknown".

3.12.1.4 BeiDou

For BeiDou signals there is a fairly straightforward mapping between the reported subframe and the structure of subframe and words described in the BeiDou ICD. Each subframe comprises ten data words, which are reported in the same order they are received.

Each word is arranged as follows:

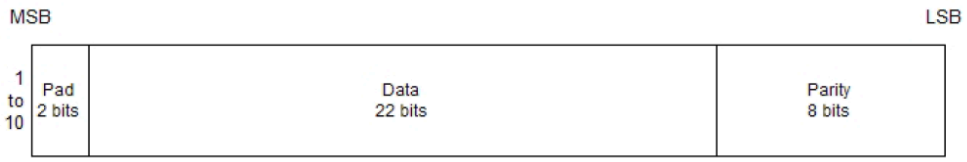

Figure 25: BeiDou subframe word

Note that as the BeiDou data words only comprise 30 bits, the 2 most significant bits in each word reported by UBX-RXM-SFRBX are padding and should be ignored.

3.12.1.5 Galileo

The Galileo E1-B and E5b in-phase signals (ZED-F9T-00B) transmit the I/NAV data message but in different configurations to enhance download time for dual frequency receivers. The Galileo E1-B and E5a signals (ZED-F9T-10B, ZED-F9T-20B) transmit the I/NAV and F/NAV message respectively. The UBX-RXM-SFRBX structure for the I/NAV and F/NAV messages are shown below.

3.12.1.5.1 Galileo E1-B

For the Galileo E1-B signal, each reported subframe contains a pair of I/NAV pages as described in the Galileo ICD. Galileo pages can either be "Nominal" or "Alert" pages. For Galileo "Nominal" pages the eight words are arranged as follows:

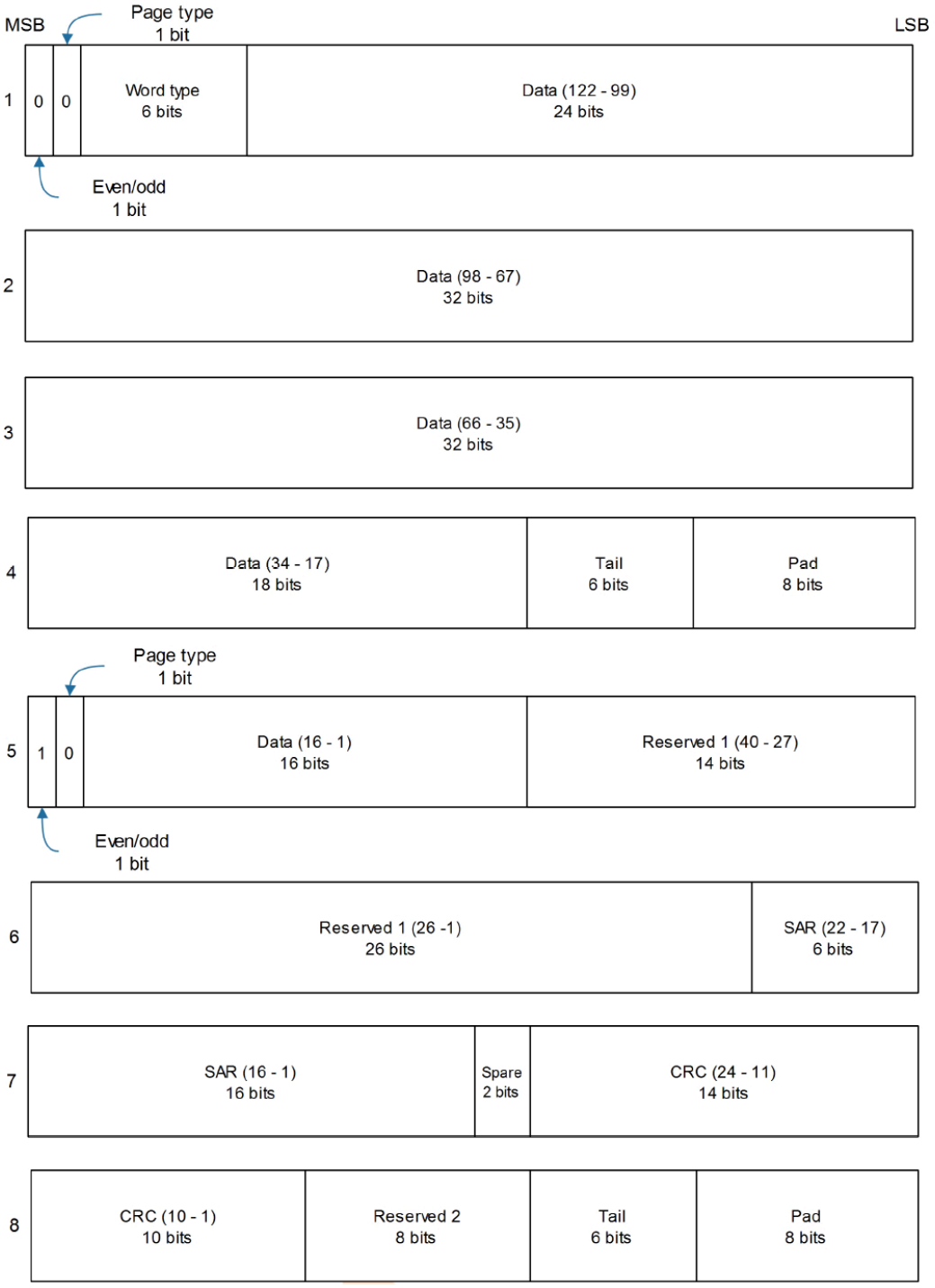

Figure 26: Galileo E1-B subframe words

Alert pages are reported in very similar manner, but the page type bits will have value 1 and the structure of the eight words will be slightly different (as indicated by the Galileo ICD).

3.12.1.5.2 Galileo E5b

For the Galileo E5b in-phase signal data component, each reported subframe contains a pair of I/NAV pages as described in the Galileo ICD. Galileo pages can either be "Nominal" or "Alert" pages. For Nominal pages the eight words are arranged as follows:

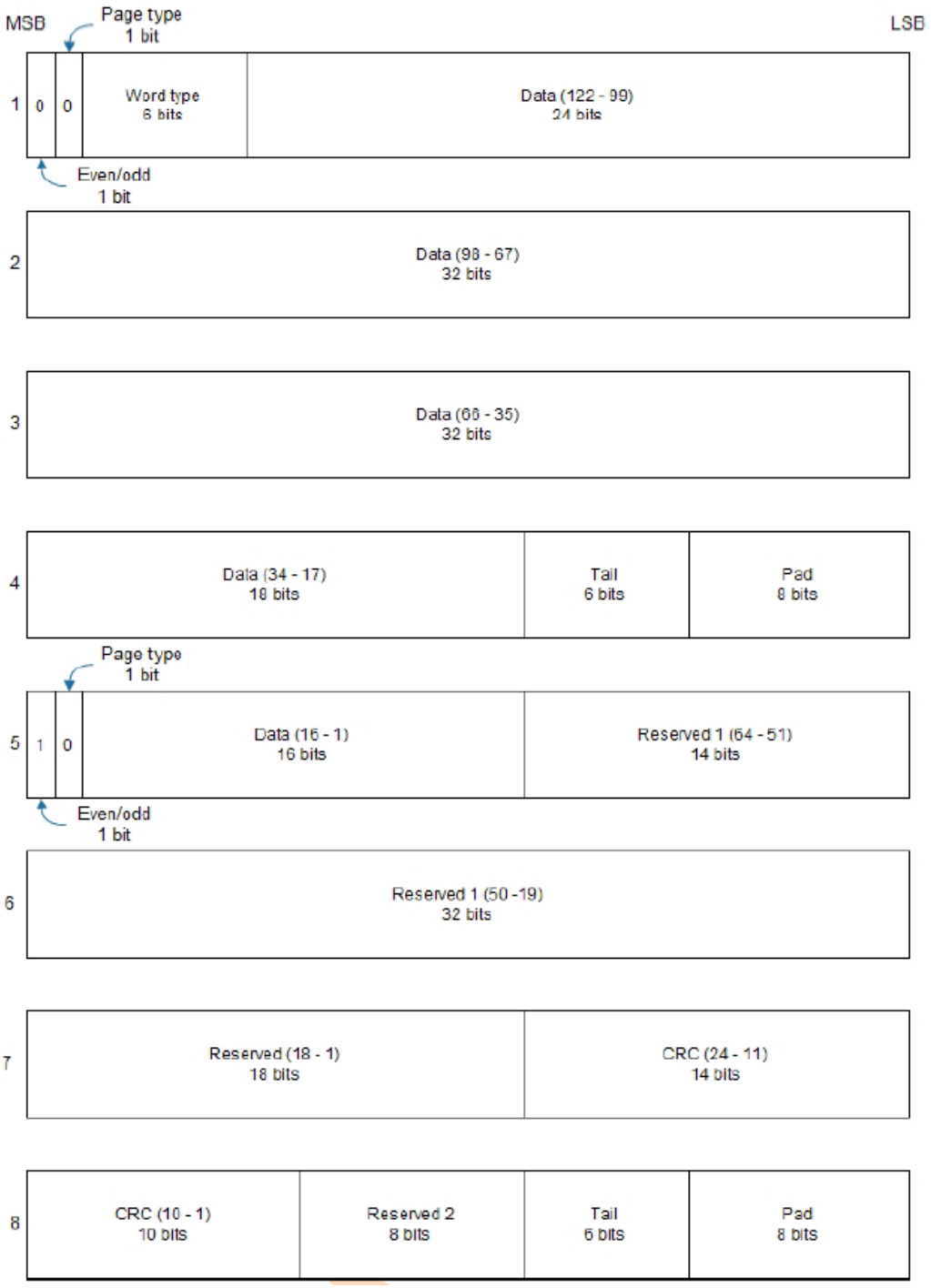

Figure 27: Galileo E5b subframe words

3.12.1.5.3 Galileo E5a

For the Galileo E5a in-phase signal data component, each reported subframe contains a number of F/NAV pages as described in the Galileo ICD. For each page the eight words are arranged as follows:

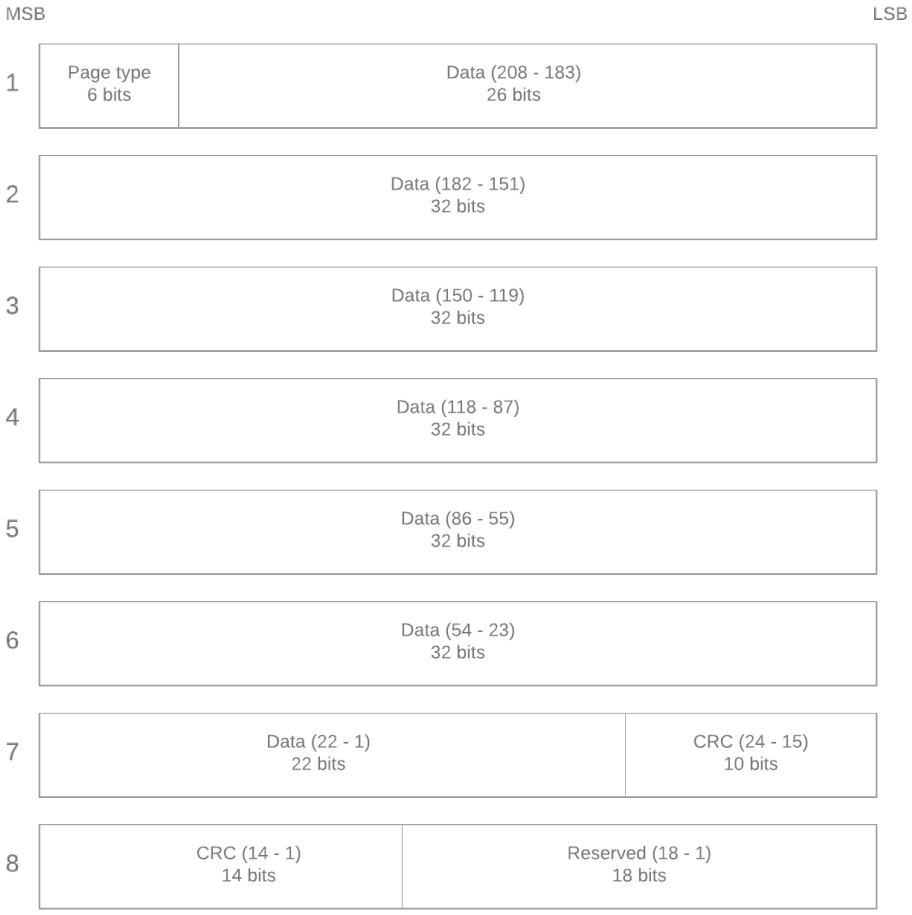

Figure 28: Galileo E5a subframe words

3.12.1.6 SBAS

For SBAS (L1C/A) signals each reported subframe contains eight 32-bit data words to deliver the 250 bits transmitted in each SBAS data block.

The eight words are arranged as follows:

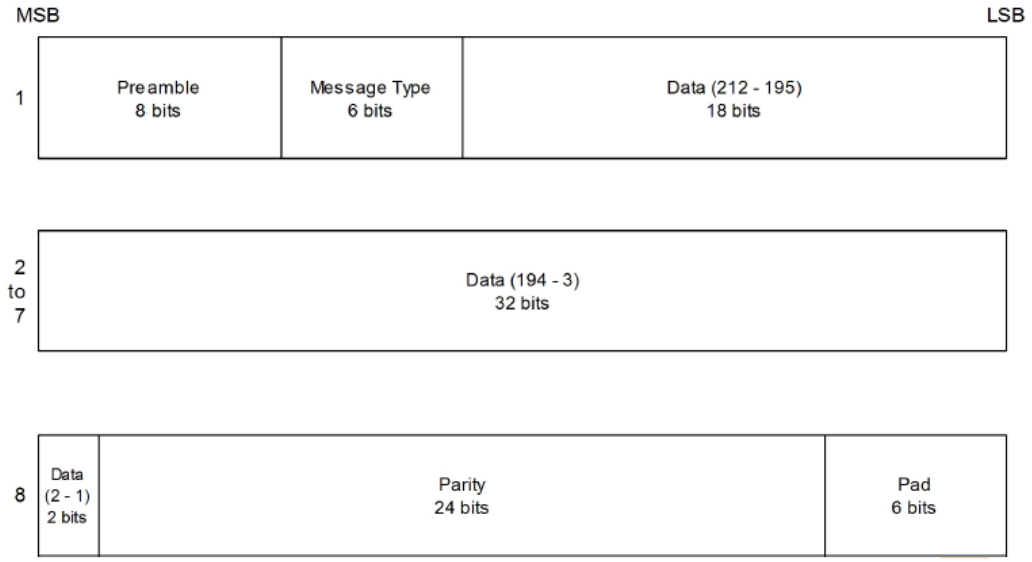

Figure 29: SBAS subframe words

3.12.1.7 QZSS

The structure of the data delivered by QZSS L1C/A signals is effectively identical to that of GPS (L1C/A). Similarly the structure of the data delivered by the QZSS L2C signal is effectively identical to that of GPS (L2C). Similarly the structure of the data delivered by the QZSS L2C and L5 signals are effectively identical to that of GPS L2C and L5 respectively.

3.12.1.8 Summary

The following table gives a summary of the different data message formats reported by the UBX-RXM-SFRBX message:

GNSS	Signal	gnssId	sigId	numWords	period
GPS	L1C/A	0	0	10	6s
GPS	L2CL	0	3	10	12s
GPS	L2CM	0	4	10	12s
GPS	L5 I	0	6	10	6s
SBAS	L1C/A	1	0	9	1s
Galileo	E1 B	2	1	8	2s
Galileo	E5b I	2	5	8	2s
Galileo	E5a I	2	3	8	10s
BeiDou	B1I D1	3	0	10	6s
BeiDou	B1I D2	3	1	10	0.6s
BeiDou	B1C	3	5	57	18s
BeiDou	B2I D1	3	2	10	6s
BeiDou	B2I D2	3	3	10	0.6s
BeiDou	B2a	3	7	9	3s
QZSS	L1C/A	5	0	10	6s
QZSS	L2CM	5	4	10	12s
QZSS	L2CL	5	5	10	12s
QZSS	L5 I	5	8	10	6s

GNSS	Signal	gnssId	sigId	numWords	period
GLONASS	L1OF	6	0	3	2s
GLONASS	L2OF	6	2	3	2s
NavIC	L5 A	7	0	10	12s

Table 32: Data message formats reported by UBX-RXM-SFRBX

3.12.2 Save-on-shutdown

The save-on-shutdown (SOS) feature enables the u-blox receiver to store its operational state, such as satellite orbit information and GNSS assistance data to the flash memory when the battery-backed RAM (BBR) is not available. Unlike battery backup, the SOS feature cannot preserve any form of time information.

⚠ **CAUTION** Risk of losing receiver configuration. The save-on-shutdown feature does not restore receiver configurations saved in the BBR.

The save-on-shutdown must be commanded by the host whereas the receiver restores the data automatically on startup is if the data is available in the flash. The receiver does not check the data expiration.

The following outlines the suggested shutdown procedure when using the save-on-shutdown feature:

- With the UBX-CFG-RST message, the host commands the u-blox receiver to stop, specifying reset mode 0x08 ("Controlled GNSS stop") and a BBR mask of 0 ("Hotstart").
- The host commands the saving of the contents of BBR to the flash memory using the UBX-UPD-SOS-BACKUP message.
- For a valid request the u-blox receiver reports on the success of the backup operation with a UBX-UPD-SOS-ACK message.
- The host powers off the u-blox receiver.

The startup procedure is as follows:

- The host powers on the u-blox receiver.
- The u-blox receiver detects the previously stored data in the flash. It restores the corresponding memory and reports the success of the operation with a UBX-UPD-SOS-RESTORED message on the port on which it had received the save command message (if the output protocol filter on that port allows it). It does not report anything if no stored data has been detected.
- Additionally the u-blox receiver outputs a UBX-INF-NOTICE and/or a NMEA-TXT message with the contents `RESTORED` in the boot screen (depends on the configuration of the port and information messages) upon success.
- Optionally the host can deliver coarse time assistance using UBX-MGA-INI-TIME_UTC for better startup performance.

Once the u-blox receiver has started up it is recommended to delete the stored data using a UBX-UPD-SOS-CLEAR message. The u-blox receiver responds with a UBX-ACK-ACK / UBX-ACK-NAK message.

3.12.3 Spectrum analyzer

The UBX-MON-SPAN message provides a low-resolution RF spectrum analyzer function sufficient to identify noise or jammers in the receiver's reception band(s). It can be used for monitoring potential interferers during customer integration and in normal operation to identify interference, e.g. when the UBX-SEC-SIG or UBX-MON-RF message detects a possible jamming threat. See Jamming/interference indicator for more details. u-center provides a visualization of the message spectrum output(s) with features for max-hold and averaging.

☞ This message is intended for comparative analysis of the RF spectrum rather than absolute and precise measurement.

The message is output once per second when enabled. Depending on the receiver type, one or two measurement blocks will be output, indicated by the numRfBlocks flag field. The first block provides L1 spectrum data which can be followed by an L2 or L5 block with multi-band receivers.

Each block comprises the following data:

- 256 spectrum data points (0.25 dB units)
- Spectrum span (Hz)
- Spectrum bin resolution (Hz)
- Center frequency (Hz)
- PGA setting (dB)

The frequency of each point can be calculated by Freq(i) = center frequency + spectrum span * (i-128) / 256, where i=0-255. The number of points = span/resolution and is scaled in units of 0.25 dB. Changes in the PGA gain value can indicate an increased input in RF signal activity compared to normal operation.

Figure 30 shows the spectrum view in u-center with the view/hold option selected. The red line represents the frozen spectrum before modifying the external gain, while the black line represents the current measurement.

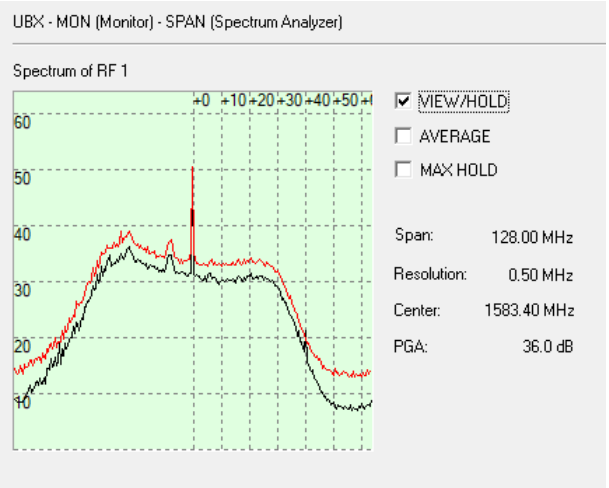

Figure 30: Spectrum analyzer view in u-center with the option view/hold selected

☞ The span frequency depends on the number of constellations enabled which impacts the spectrum resolution owing to a fixed set of points. For further details about this message see the Interface description [2].

☞ A spur may be visible at the center frequency, this comes internally from the receiver and does not cause any performance degradation.

3.12.4 Sky view signal masking

When a stationary receiver's antenna has a poor view of the sky, the resultant performance can be compromised owing to signal distortion produced by processing non-line-of-sight signals. A legacy configuration CFG-NAVSPG-INFIL_MINELEV key can set a common minimum elevation angle below which satellites will not be used. The default angle is set to 10 deg. The configuration provides a common minimum elevation cut-off for all satellite azimuth angles.

A second method is to use The CFG-NAVMASK-EL_MASK key which allows users to mask individual portions of the sky to prevent receiving signals in a known blocked direction. This is especially useful for timing receivers when surveyed into urban locations with a restricted sky view. Customers can e.g. use local mapping data to predict the sky view and set appropriate masking parameters. The CFG-NAVMASK-EL_MASK configuration allows masking of set parts of the sky in increments of nominally 5 deg. in azimuth and elevation.

Users should take note that satellites may be blocked by the elevation masking message (CFG-NAVSPG-INFIL_MINELEV) described above when used together.

For more information about these messages and the configuration keys see the applicable Interface description [2].

3.13 Forcing a receiver reset

Typically, in GNSS receivers, a distinction is made between cold, warm, and hot start, depending on the type of valid information the receiver has at the time of the restart.

- **Cold start:** In cold start mode, the receiver has no information from the last position (e.g. time, velocity, frequency etc.) at startup. Therefore, the receiver must search the full time and frequency space, and all possible satellite numbers. If a satellite signal is found, it is tracked to decode the ephemeris (18-36 seconds under strong signal conditions), whereas the other channels continue to search satellites. Once there is a sufficient number of satellites with valid ephemeris, the receiver can calculate position and velocity data. Other GNSS receiver manufacturers call this startup mode **Factory startup**.
- **Warm start:** In warm start mode, the receiver has approximate information for time, position, and coarse satellite position data (Almanac). In this mode, after power-up, the receiver normally needs to download ephemeris before it can calculate position and velocity data. As the ephemeris data usually is outdated after 4 hours, the receiver will typically start with a warm start if it has been powered down for more than 4 hours. In this scenario, several augmentations are possible. See AssistNow GNSS assistance.
- **Hot start:** In hot start mode, the receiver was powered down only for a short time (4 hours or less), so that its ephemeris is still valid. Since the receiver does not need to download ephemeris again, this is the fastest startup method.

Using the UBX-CFG-RST message, you can force the receiver to reset and clear data, in order to see the effects of maintaining/losing such data between restarts. For this, the UBX-CFG-RST message offers the `navBbrMask` field, where hot, warm and cold starts can be initiated, and also other combinations thereof.

The reset type can also be specified. This is not related to GNSS, but to the way the software restarts the system.

- **Hardware reset** uses the on-chip watchdog, to electrically reset the chip. This is an immediate, asynchronous reset. No Stop event is generated.
- **Controlled software reset** terminates all running processes in an orderly manner and, once the system is idle, restarts operation, reloads its configuration and starts to acquire and track GNSS satellites.
- **Controlled software reset (GNSS only)** only restarts the GNSS tasks, without reinitializing the full system or reloading any stored configuration.
- **Hardware reset (after shutdown)** uses the on-chip watchdog. This is a reset after shutdown.
- **Controlled GNSS stop** stops all GNSS tasks. The receiver will not be restarted, but will stop any GNSS-related processing.
- **Controlled GNSS start** starts all GNSS tasks.

3.14 Firmware upload

ZED-F9T is supplied with firmware. u-blox may release updated images containing, for example, security fixes, enhancements, bug fixes, etc. Therefore it is important that customers implement a firmware update mechanism in their system.

A firmware image is a binary file containing the software to be run by the GNSS receiver. A firmware update is the process of transferring a firmware image to the receiver and storing it in non-volatile flash memory.

Contact u-blox for more information on firmware update.

3.15 Production test

u-blox focuses on high quality for its products. To achieve this, we only supply fully tested units. At the end of the production process, every unit is tested. Defective units are analyzed in detail to continuously improve the production quality.

This is achieved with automatic test equipment, which delivers a detailed test report for each unit. The following measurements are done:

- Digital self-test (software download, verification of FLASH firmware, etc.)
- Measurement of voltages and currents
- Measurement of RF characteristics (e.g. C/N0)

Thanks to the 100 % test coverage done by u-blox, the OEM manufacturer doesn't need to repeat firmware tests or measurements of the GNSS parameters/characteristics (e.g. TTFF) in the production test.

The OEM manufacturer can focus on testing:

- Overall sensitivity of the device (including antenna, if applicable)
- Communication to a host controller

3.15.1 Connected sensitivity test

The best way to test the sensitivity of a positioning device is with the use of a GNSS simulator. It assures reliable and constant signals at every measurement.

Guidelines for sensitivity tests:

- Connect a GNSS simulator to the OEM product
- Choose the power level in a way that the "Golden Device" would report a C/N0 ratio of 38-40 dBHz
- Power up the DUT (Device Under Test) and allow enough time for the acquisition
- Read the C/N0 value from the NMEA GSV or the UBX-NAV-SAT message (e.g. with u-center)
- Compare the results to a "Golden Device", a u-blox Evaluation Kit or Application Board.

3.15.2 Go/No go tests for integrated devices

- For best results, place the device in an outdoor position with excellent sky view (HDOP < 3.0).
- Let the receiver acquire satellites and compare the signal strength with a "Golden Device". As the electro-magnetic field of a redistribution antenna is not homogenous, indoor tests are not reliable in most cases.

These kinds of tests are useful as a go/no go test but not for sensitivity measurements.

4 Design

This section provides information to help carry out a successful schematic and PCB design integrating the ZED-F9T.

⚠ Do not load Pin 4 (ANT_DETECT) with a capacitance more than 1 nF.

4.1 Pin assignment

The pin assignment of the ZED-F9T module is shown in Figure 31. The defined configuration of the PIOs is listed in Table 33.

☞ ZED-F9T is an LGA package with the I/O on the outside edge and central ground pads.

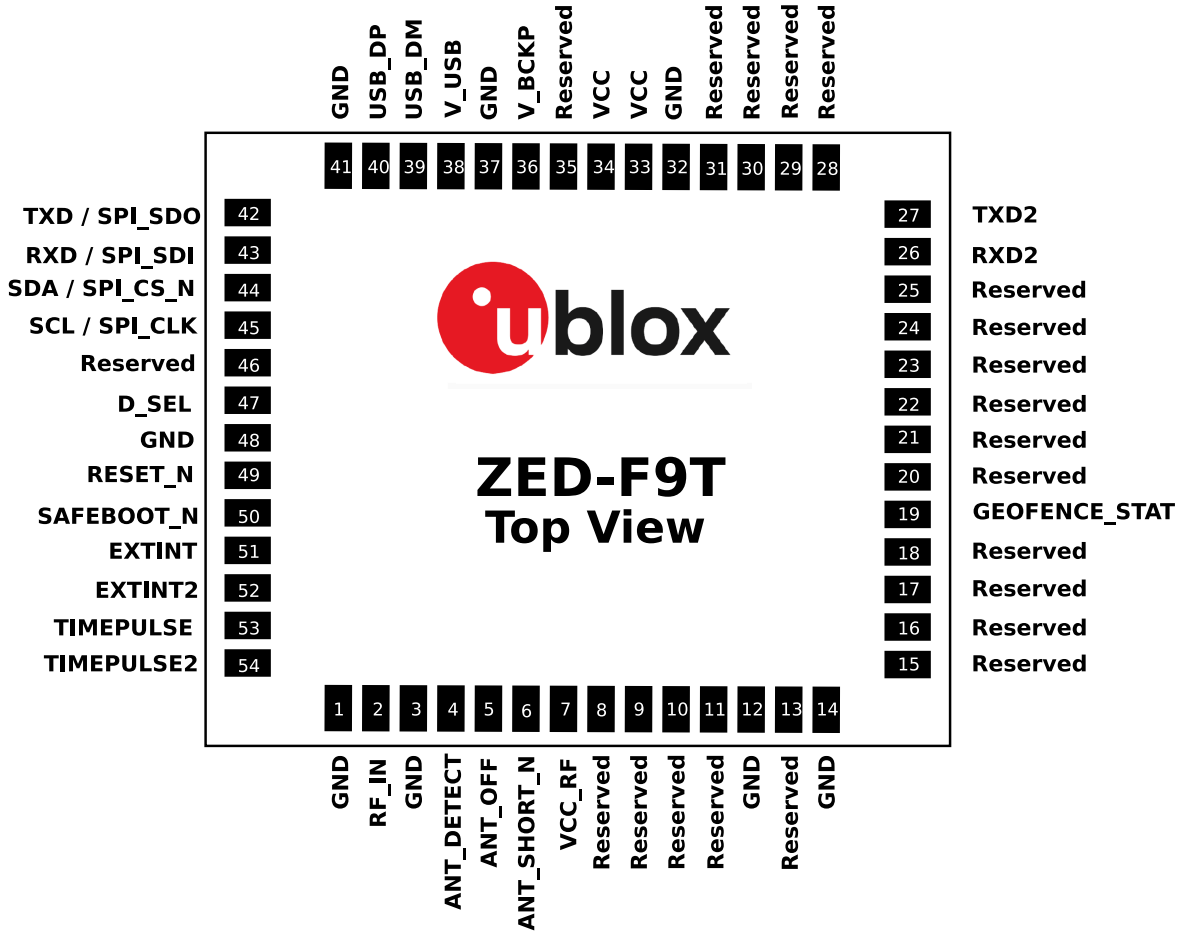

Figure 31: ZED-F9T pin assignment

Pin no.	Name	I/O	Description
1	GND	-	Ground
2	RF_IN	I	RF input
3	GND	-	Ground
4	ANT_DETECT	I	Active antenna detect - default active high
5	ANT_OFF	O	External LNA disable - default active high
6	ANT_SHORT_N	I	Active antenna short detect - default active low

Pin no.	Name	I/O	Description
7	VCC_RF	O	Voltage for external LNA
8	Reserved	-	Reserved
9	Reserved	-	Reserved
10	Reserved	-	Reserved
11	Reserved	-	Reserved
12	GND	-	Ground
13	Reserved	-	Reserved
14	GND	-	Ground
15	Reserved	-	Reserved
16	Reserved	-	Reserved
17	Reserved	-	Reserved
18	Reserved	-	Reserved
19	GEOFENCE_STAT	O	Geofence status, user defined
20	Reserved	-	Reserved
21	Reserved	-	Reserved
22	Reserved	-	Reserved
23	Reserved	-	Reserved
24	Reserved	-	Reserved
25	Reserved	-	Reserved
26	RXD2	I	Correction UART input
27	TXD2	O	Correction UART output
28	Reserved	-	Reserved
29	Reserved	-	Reserved
30	Reserved	-	Reserved
31	Reserved	-	Reserved
32	GND	-	Ground
33	VCC	I	Voltage supply
34	VCC	I	Voltage supply
35	Reserved	-	Reserved
36	V_BCKP	I	Backup supply voltage
37	GND	-	Ground
38	V_USB	I	USB supply
39	USB_DM	I/O	USB data
40	USB_DP	I/O	USB data
41	GND	-	Ground
42	TXD / SPI_SDO	O	Host UART output if D_SEL = 1(or open). SPI_SDO if D_SEL = 0
43	RXD / SPI_SDI	I	Host UART input if D_SEL = 1(or open). SPI_SDI if D_SEL = 0
44	SDA / SPI_CS_N	I/O	I2C Data if D_SEL = 1 (or open). SPI Chip Select if D_SEL = 0
45	SCL / SPI_CLK	I/O	I2C Clock if D_SEL = 1(or open). SPI Clock if D_SEL = 0
46	Reserved	-	Reserved
47	D_SEL	I	Interface select for pins 42-45
48	GND	-	Ground
49	RESET_N	I	RESET_N

Pin no.	Name	I/O	Description
50	SAFEBOOT_N	I	SAFEBOOT_N (If not used, leave open)[4]
51	EXTINT	I	External interrupt pin
52	EXTINT2	I	External interrupt pin 2
53	TIMEPULSE	O	Time pulse
54	TIMEPULSE2	O	Time pulse 2

Table 33: ZED-F9T pin assignment

4.2 Power supply

The u-blox ZED-F9T module has three power supply pins: VCC, V_BCKP and V_USB.

4.2.1 VCC: Main supply voltage

The **VCC** pin is connected to the main supply voltage. During operation, the current drawn by the module can vary by some orders of magnitude. For this reason, it is important that the supply circuitry be able to support the peak power for a short time (see the applicable data sheet [1] for specification).

The module integrates a DC/DC converter, which allows reduced power consumption.

☞ When switching from the backup mode to the normal operation, or at startup, u-blox ZED-F9T modules must charge the internal capacitors in the core domain. In certain situations, this can result in a significant current draw. For low-power applications using backup mode, it is important that the power supply or low ESR capacitors at the module input can deliver this current/charge.

☞ To reduce peak current during power on, users can employ an LDO that has a built-in current limiter.

☞ Do not add any series resistance greater than 0.2 Ω to the VCC supply as it will generate input voltage noise due to dynamic current conditions.

☞ For the ZED-F9T module the equipment must be supplied by an external limited power source in compliance with the clause 2.5 of the standard IEC 60950-1.

4.2.2 V_BCKP: Backup supply voltage

The V_BCKP pin can be used to provide power to maintain the real-time clock (RTC) and battery-backed RAM (BBR) when VCC is removed.

If the module supply has a power failure, the **V_BCKP** pin supplies the real-time clock (RTC) and battery-backed RAM (BBR). Use of valid time and the GNSS orbit data at start up will improve the GNSS performance, as with hot starts and warm starts.

If V_BCKP is not provided, the module performs a cold start at power up.

If a host is connected to ZED-F9T, V_BCKP can be partially emulated by using UBX-UPD-SOS functionality. BBR data can saved to the host and restored at startup. See the applicable Interface description for more information.

☞ Avoid high resistance on the **V_BCKP** line: During the switch from main supply to backup supply, a short current adjustment peak can cause a high voltage drop on the pin with possible malfunctions.

[4] The receiver enters safeboot mode if SAFEBOOT_N pin is low at start up. The SAFEBOOT_N pin is internally connected to TIMEPULSE2 pin through a 1 kΩ series resistor.

☞ Add a 2 uF capacitor on the V_BCKP pin to absorb the current adjustment peak when switching from VCC to V_BCKP supply.

☞ If no backup supply voltage is available, connect the **V_BCKP** pin to **VCC**.

☞ Allow all I/O including UART and other interfaces to float or connect to a high impedance in HW backup mode (V_BCKP supplied when VCC is removed). See the Interfaces section.

Real-time clock (RTC)

The real-time clock (RTC) is driven by a 32-kHz oscillator using an RTC crystal. If VCC is removed while a battery is connected to **V_BCKP**, most of the receiver is switched off leaving the RTC and BBR powered. This operating mode is called Hardware Backup Mode which enables time keeping and all relevant data to be saved to allow a hot or warm start.

4.2.3 ZED-F9T power supply

The ZED-F9T requires a low-noise, low-dropout voltage, and a very low source impedance power supply of 3.3 V typically. No inductors or ferrite beads should be used from LDO to the module VCC pin. The peak currents need to be taken into account for the source supplying the LDO for the module.

A power supply fed by 5 V is shown in the figure below. This example circuit is intended only for the module supply.

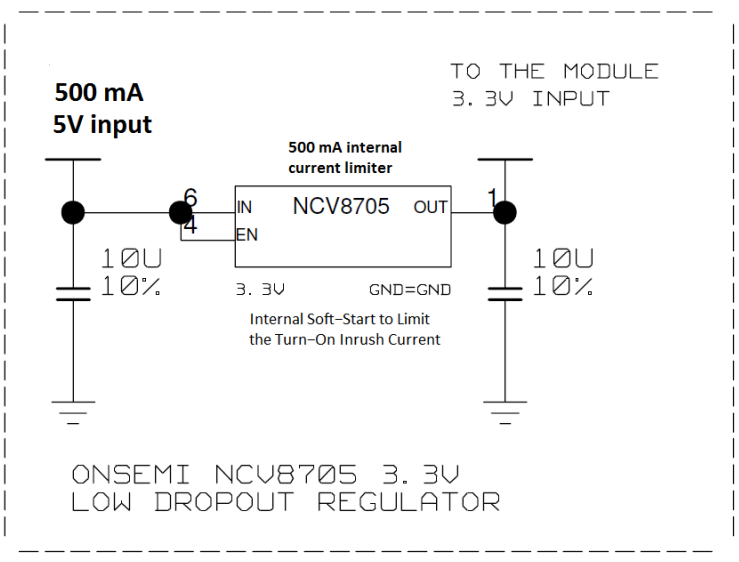

Figure 32: ZED-F9T power supply

4.3 ZED-F9T minimal design

The minimal electrical circuit for ZED-F9T operation using the UART1 interface is shown in Figure 33 below.

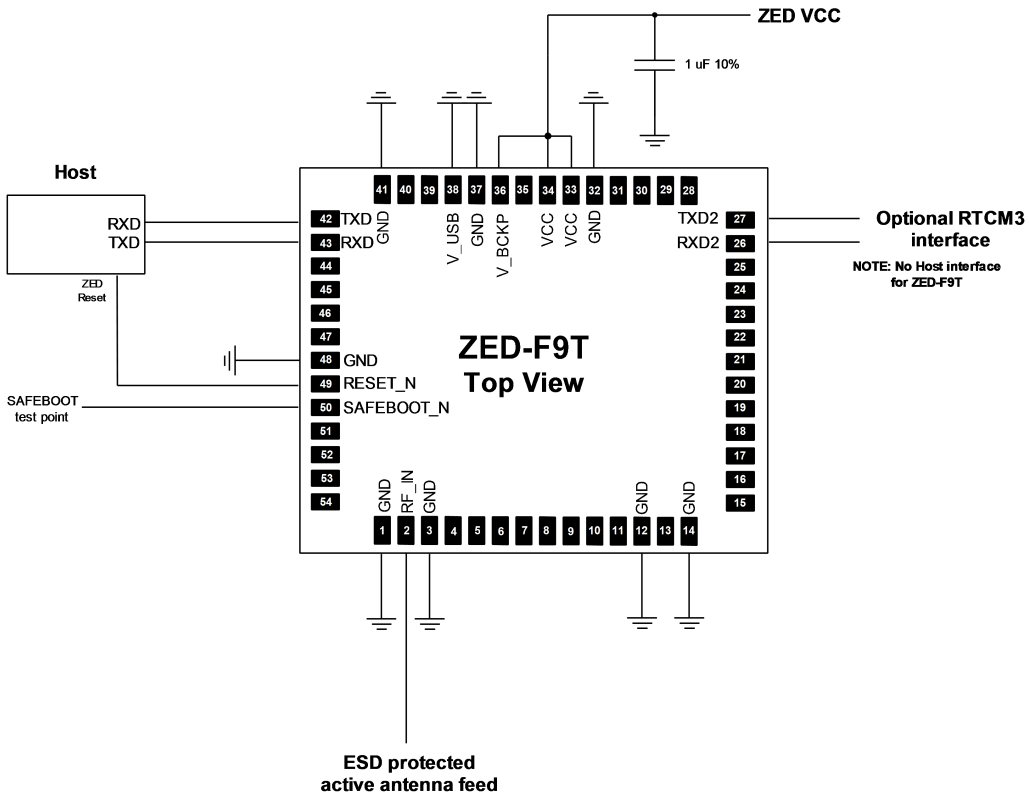

Figure 33: Minimal ZED-F9T design

For a minimal design with the ZED-F9T GNSS modules, the following functions and pins should be considered:

- Connect the power supply to VCC and V_BCKP.
- If hot or warm start operations are needed, connect a backup battery to V_BCKP.
- If USB is not used connect V_USB to ground.
- Ensure an optimal ground connection to all ground pins of the ZED-F9T GNSS module.
- If antenna bias is required, see ZED-F9T antenna bias section.

4.4 Antenna

ZED-F9T requires an active antenna with an integrated LNA to ensure good performance under nominal signal reception.

When implementing a custom antenna installation, it is recommended that an OEM active antenna module be used that meets our specification. Implementing a custom active antenna design is an important exercise to meet the required bandwidths and group delay specifications compared to previous L1-only designs.

A typical dual band antenna design block diagram is shown below taken from the u-blox ANN-MB active antenna product.

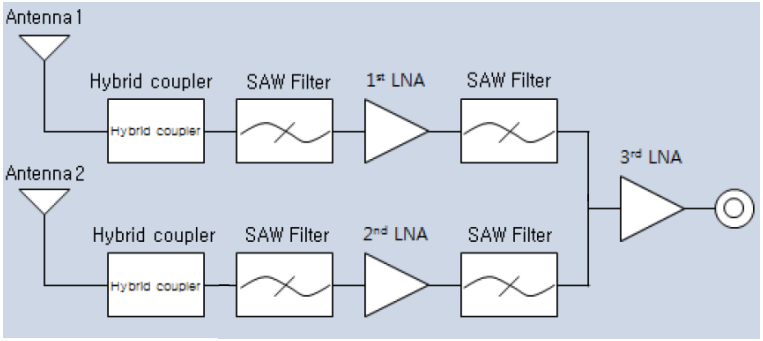

Figure 34: u-blox low cost dual-band antenna internal structure

☞ A suitable ground plane is required for the antenna to achieve good performance.

☞ Location of the antenna is critical to reach the stated performance. For timing receivers locate to provide a good all round sky view. Unsuitable locations within a vehicle could include, under vehicle dash, rear-view mirror location, etc.

A set of recommended specifications for a dual band active antenna is given below.

Parameter	Specification	
Active antenna recommendations	Minimum gain[5]	17 dB
	Maximum gain[5]	50 dB
	Noise figure	<4 dB
Group delay variation in-band [6]	10 ns max at each GNSS system bandwidth. Note: Inter-signal requirement 50 ns max.	
Out-of-band rejection	40 dB typ	
Antenna element specification	L1 band antenna gain [7]	1559 - 1606 MHz: 3 dBic typ.
	L2/E5b band antenna gain[7]	1197 - 1249 MHz: 2 dBic typ.
	L5/E5a band antenna gain[7]	1164 - 1188 MHz: 2 dBic typ.
	Polarization	RHCP
	Axial ratio	2 dB max, at Zenith
	Phase center variation	<10 mm over elevation/azimuth
EMI immunity out-of-band[8]	30 V/m	
ESD circuit protection	15 kV human body model air discharge	

Table 34: Antenna specifications for ZED-F9T modules

5 Including passive losses (filters, cables, connectors etc.)

6 GNSS system bandwidths:
ZED-F9T-00B: B1I 1559...1563 MHz; L1,E1,B1C 1573...1578 MHz; L1OF 1598...1606 MHz; E5b,B2I 1192...1212 MHz; L2C 1223...1231 MHz; L2OF 1242...1249 MHz

ZED-F9T-10B: B1I 1559...1563 MHz; L1,E1,B1C 1573...1578 MHz; L1OF 1598...1606 MHz; L5,E5a,B2a 1166...1286 MHz

ZED-F9T-20B: B1I 1559...1563 MHz; L1,E1,B1C 1573...1578 MHz; E5b,B2I 1192...1212 MHz; L2C 1223...1231 MHz; L5,E5a,B2a 1166...1286 MHz

7 Measured with a ground plane d=150 mm

8 Exception L1,L2 ,L5 bands +/- 200 MHz, emphasis on cellular bands

The antenna system should include filtering to ensure adequate protection from nearby transmitters. Take care in the selection of antennas placed close to cellular or Wi-Fi transmitting antennas.

4.4.1 Active Antenna Power Supply

The antenna power supply is typically used to power GNSS active antennas. The power supply should be able to provide the correct voltage and current to the antenna to ensure optimal performance of ZED-F9T.

To power and limit the current to the antenna, you have the following options:

- External power supply
- External power supply and current limiting
- VCC_RF power supply

The diagram shows the Z impedance of the antenna bias L4 inductor. This inductor is found in all the reference circuits mentioned in the subsequent sections. It is important for the Z impedance to be greater than 500 Ω within the 1–1.8 GHz frequency range. This impedance ensures efficient blocking of RF signals from reaching the power supply.

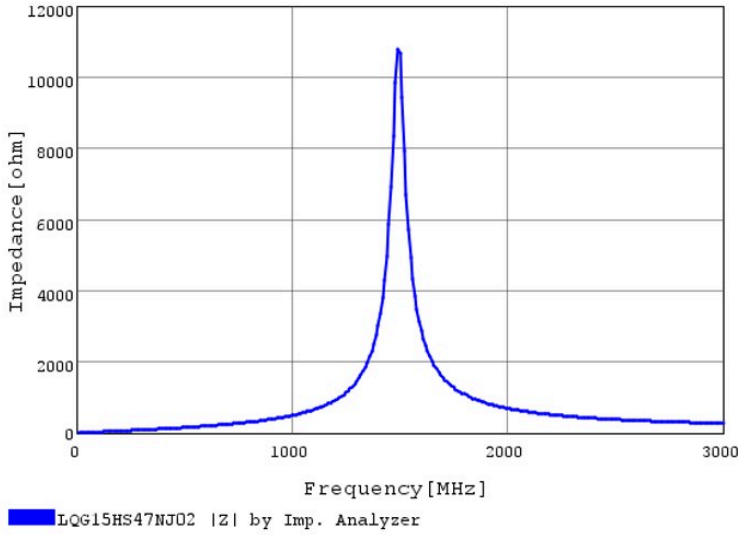

Figure 35: ZED-F9T antenna bias inductor impedance

4.4.1.1 External power supply

Figure 36 shows an example with an external filtered supply V_ANT 3.3 V. Consider the power dissipation in both the resistor and inductor based on the supply voltage and short circuit current. Calculate the current capacity of the bias-T inductor and the value of the bias resistor. Include the supply voltage and its current capacity for the bias-T in the calculation.

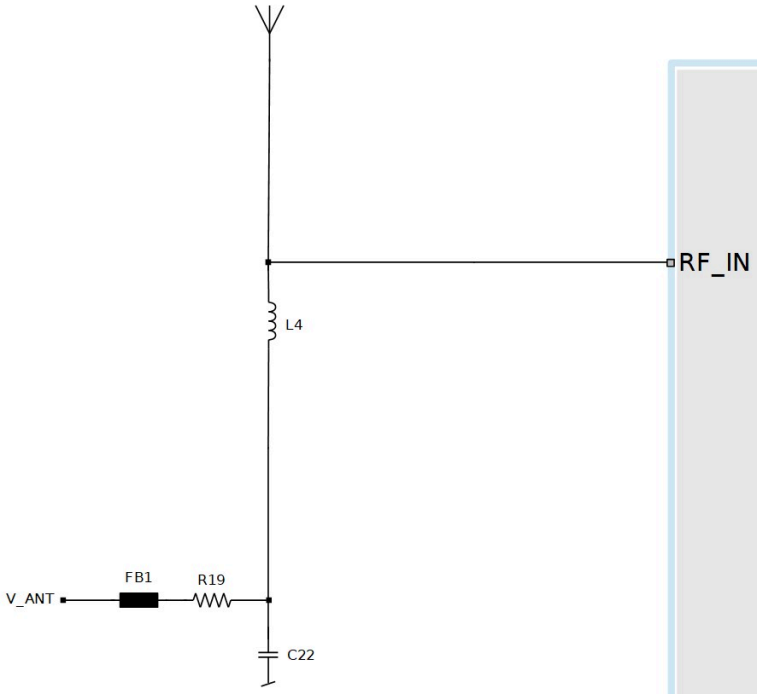

Figure 36: ZED-F9T with external voltage antenna bias

Part	Specifications	Values
C22	Filtering capacitor	100 nF, 16 V
FB1	Ferrite bead	BLM15HB121SH1
L4	Minimum Current of 300 mA or more impedance >500 Ω at GNSS frequencies	LQG15HS47NJ02
R19	Current limit resistor	10 Ω

Table 35: ZED-F9T external voltage antenna bias components

4.4.1.2 External power supply and current limiting

Figure 37 shows an example with an external voltage V_ANT 3.3 V. In this example, the current limiting threshold is set at 60 mA and the use of ferrite bead is recommended.

☞ Note that active antennas typically draw 5–20 mA current, contributing to the overall power consumption of the system.

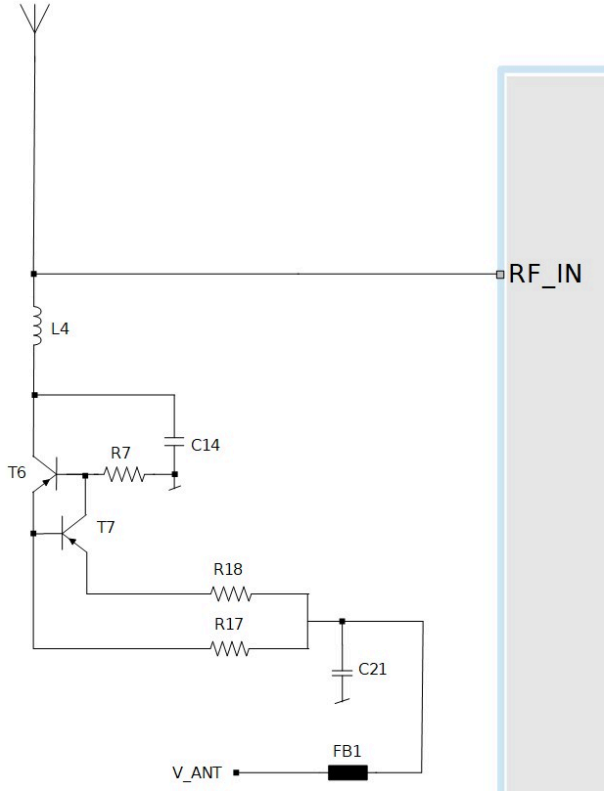

Figure 37: ZED-F9T with external voltage antenna bias and current limit circuit

Part	Specifications	Values
C14	Filtering capacitor	10n, Bias-T, X7R 10N 10% 16 V
C21	Filtering capacitor	100 nF, 16 V
FB1	Ferrite bead	BLM15HB121SH1
L4	Minimum Current of 300 mA or more impedance >500 Ω at GNSS frequencies	LQG15HS47NJ02
R7	Passive pull-up to control T6	PNP off 2.2 kΩ
R18	Defines the threshold of the comparator	220 Ω
R17	Defines the threshold of the comparator	10 Ω
T6, T7	BJT PNP transistors	PNP

Table 36: ZED-F9T antenna bias components

4.4.1.3 VCC_RF power supply

When using the VCC_RF supply pin from ZED-F9T:

- Limit the current to a maximum of 300 mA at the module supply voltage under short circuit conditions, requiring a 10 Ω resistor for a 3 V module supply.
- The bias-T inductor's DC resistance is assumed to be 1–2 Ω, and the module's internal feed inductor is assumed to be 1.2 Ω.

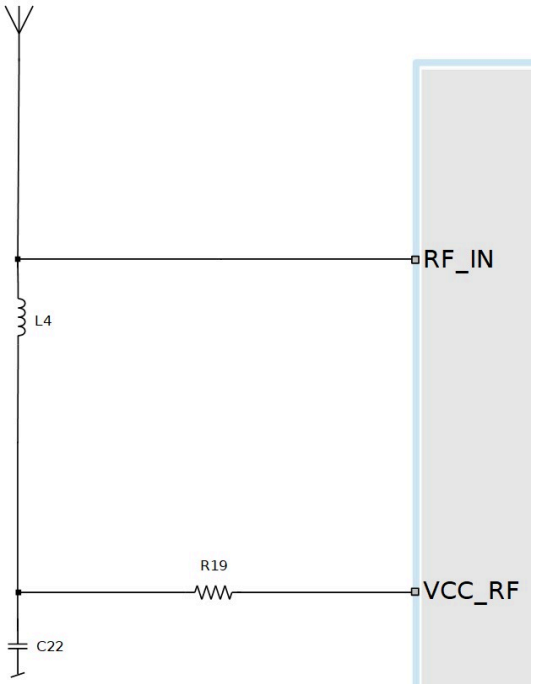

Figure 38: ZED-F9T VCC_RF antenna bias

Part	Specifications	Values
C22	Filtering capacitor	100 nF, 16 V
FB1	Ferrite bead	BLM15HB121SH1
L4	Minimum Current of 300 mA or more impedance >500 Ω at GNSS frequencies	LQG15HS47NJ02
R19	Current limit resistor	10 Ω

Table 37: ZED-F9T VCC_RF antenna bias components

4.4.2 Antenna supervisor circuit

The active antenna supervisor circuit connects to three ZED-F9T pins:

- ANT_OFF
- ANT_DETECT
- ANT_SHORT_N

For example the antenna open circuit detection is made using ANT_DET pin. A "high" at ANT_DET pin indicates an antenna is detected (antenna consumes current) and a "low" at ANT_DET pin indicates an antenna is not detected (no current drawn).

The following schematic details the required circuit:

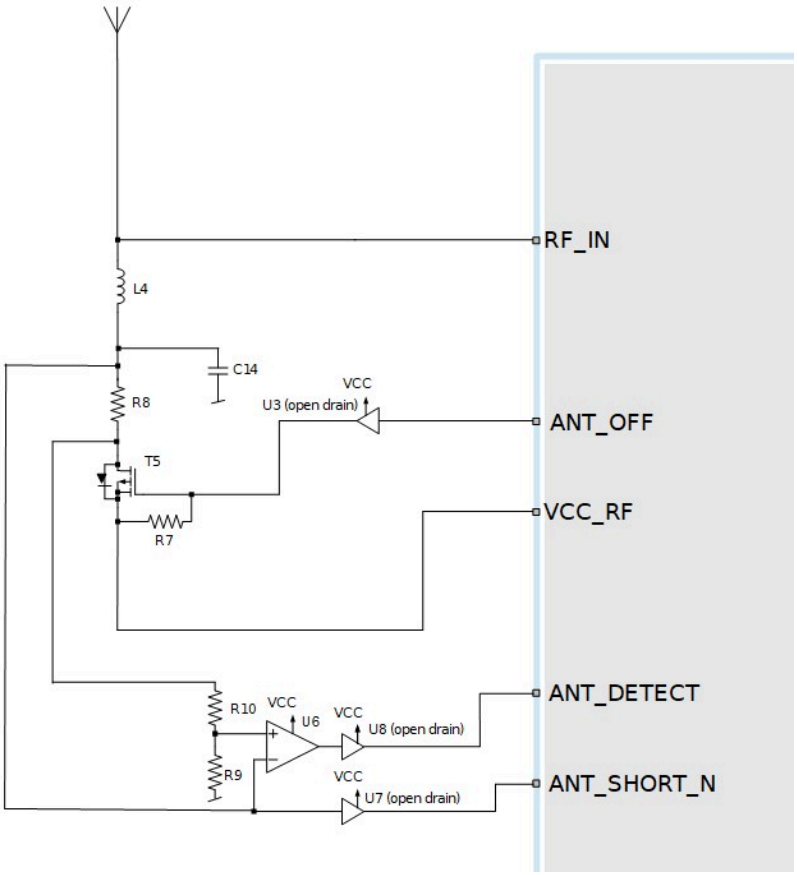

Figure 39: ZED-F9T antenna supervisor circuit

☞ The bias-T inductor L4 should support multi-band operation within the 1–1.8 GHz frequency range. For additional information, see Active Antenna Power Supply section.

Part	Specifications
C14	Filtering capacitor
L4	Minimum Current of 300 mA or more. Impedance >500 Ω at GNSS frequencies
R7	Passive pull-up to control T5
R8	Current limiter in the event of a short circuit
R9	Defines the threshold of the comparator
R10	Defines the threshold of the comparator
T5	P-FET transistor acting as a switch to control the antenna supply
U3, U7, U8	Open drain buffer to shift voltage levels
U6	Comparator (op-amp)

Table 38: Antenna supervisor components

☞ Buffers U3, U7 and U8 are optional depending on the application.They are not needed if the VCC_RF pin is used.

☞ An open drain buffer is recommended in case the antenna is supplied while the module is not, since IO pins must not be driven. If the antenna operates at a higher voltage like 5 V or 12 V, use of the buffer is also recommended.

4.5 EOS/ESD precautions

⚠ To avoid overstress damage during production or in the field it is essential to observe strict EOS/ESD/EMI handling and protection measures.

⚠ To prevent overstress damage at the RF_IN of your receiver, never exceed the maximum input power as specified in the applicable Data sheet [1].

When integrating GNSS receivers into wireless systems, pay special attention to electromagnetic and voltage susceptibility issues. Wireless systems include components which can produce Electrostatic Discharge (ESD), Electrical Overstress (EOS) and Electro-Magnetic Interference (EMI). CMOS devices are more sensitive to such influences because their failure mechanism is defined by the applied voltage, whereas bipolar semiconductors are more susceptible to thermal overstress. The following design guidelines help in designing robust yet cost-effective solutions.

4.5.1 ESD protection measures

⚠ GNSS receivers are sensitive to Electrostatic Discharge (ESD). Special precautions are required when handling. Most defects caused by ESD can be prevented by following strict ESD protection rules for production and handling. When implementing passive antenna patches or external antenna connection points, then additional ESD measures as shown in the figure below can also avoid failures in the field.

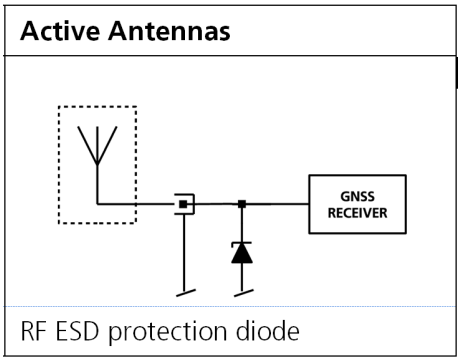

Figure 40: RF ESD precautions

4.5.2 EOS precautions

Electrical overstress (EOS) usually describes situations when the maximum input power exceeds the maximum specified ratings. EOS failure can happen if RF emitters are close to a GNSS receiver or its antenna. EOS causes damage to the chip structures. If the RF_IN is damaged by EOS, it is hard to determine whether the chip structures have been damaged by ESD or EOS.

EOS protection measures as shown in the figure below are recommended for any designs combining wireless communication transceivers (e.g. GSM, GPRS) and GNSS in the same design or in close proximity.

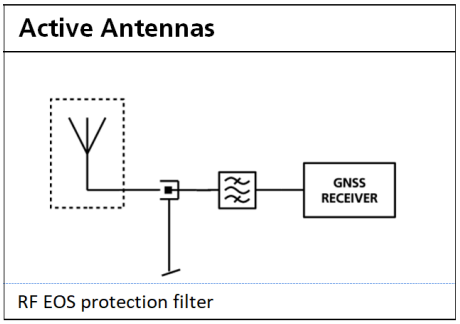

Figure 41: Active antenna EOS protection

4.5.3 Safety precautions

The ZED-F9T must be supplied by an external limited power source in compliance with the clause 2.5 of the standard IEC 60950-1. In addition to external limited power source, only Separated or Safety Extra-Low Voltage (SELV) circuits are to be connected to the module including interfaces and antennas.

☞ For more information about SELV circuits see section 2.2 in Safety standard IEC 60950-1.

4.6 Electromagnetic interference on I/O lines

Any I/O signal line with a length greater than approximately 3 mm can act as an antenna and may pick up arbitrary RF signals transferring them as noise into the receiver. This specifically applies to unshielded lines, in which the corresponding GND layer is remote or missing entirely, and lines close to the edges of the printed circuit board.

If, for example, a cellular signal radiates into an unshielded high-impedance line, it is possible to generate noise in the order of volts and not only distort receiver operation but also damage it permanently. Another type of interference can be caused by noise generated at the PIO pins that emits from unshielded I/O lines. Receiver performance may be degraded when this noise is coupled into the GNSS antenna.

EMI protection measures are particularly useful when RF emitting devices are placed next to the GNSS receiver and/or to minimize the risk of EMI degradation due to self-jamming. An adequate layout with a robust grounding concept is essential in order to protect against EMI.

☞ Intended Use: In order to mitigate any performance degradation of a radio equipment under EMC disturbance, system integration shall adopt appropriate EMC design practice and not contain cables over three meters on signal and supply ports.

4.6.1 General notes on interference issues

Received GNSS signal power at the antenna is very low. At the nominal received signal strength (-128 dBm) it is below the thermal noise floor of -111 dBm. Due to this fact, a GNSS receiver is susceptible to interference from nearby RF sources of any kind. Two cases can be distinguished:

- Out-of-band interference: Typically any kind of wireless communications system (e.g. LTE, GSM, CDMA, 3G, WLAN, Bluetooth, etc.) may emit its specified maximum transmit power in close proximity to the GNSS receiving antenna, especially if such a system is integrated with the GNSS receiver. Even at reasonable antenna selectivity, destructive power levels may reach the RF input of the GNSS receiver. Also, larger signal interferers may generate intermodulation products inside the GNSS receiver front-end that fall into the GNSS band and contribute to in-band interference.

- In-band interference: Although the GNSS band is kept free from intentional RF signal sources by radio-communications standards, many devices emit RF power into the GNSS band at levels much higher than the GNSS signal itself. One reason is that the frequency band above 1 GHz is not well regulated with regards to EMI, and even if permitted, signal levels are much higher than GNSS signal power. Notably, all types of digital equipment, such as PCs, digital cameras, LCD screens, etc. tend to emit a broad frequency spectrum up to several GHz of frequency. Also wireless transmitters may generate spurious emissions that fall into GNSS band.

As an example, GSM uses power levels of up to 2 W (+33 dBm). The absolute maximum power input at the RF input of the GNSS receiver can be +15 dBm. The GSM specification allows spurious emissions for GSM transmitters of up to +36 dBm, while the GNSS signal is less than -128 dBm. By simply comparing these numbers it is obvious that interference issues must be seriously considered in any design of a GNSS receiver. Different design goals may be achieved through different implementations:

- The primary focus is to prevent damaging the receiver from large input signals. Here the GNSS performance under interference conditions is not important and suppression of the signal is permitted. It is sufficient to just observe the maximum RF power ratings of all of the components in the RF input path.
- GNSS performance must be guaranteed even under interference conditions. In such a case, not only the maximum power ratings of the components in the receiver RF path must be observed. Further, non-linear effects like gain compression, NF degradation (desensitization) and intermodulation must be analyzed.

☞ Pulsed interference with a low-duty cycle such as GSM may be destructive due to the high peak power levels.

4.6.2 In-band interference mitigation

With in-band interference, the signal frequency is very close to the GNSS frequency. Such interference signals are typically caused by harmonics from displays, micro-controller operation, bus systems, etc. Measures against in-band interference include:

- Maintaining a good grounding concept in the design
- Shielding
- Layout optimization
- Low-pass filtering of noise sources, e.g. digital signal lines
- Remote placement of the GNSS antenna, far away from noise sources
- Adding an LTE, CDMA, GSM, WCDMA, BT band-pass filter before antenna

4.6.3 Out-of-band interference

Out-of-band interference is caused by signal frequencies that are different from the GNSS carrier frequency. The main sources are wireless communication systems such as LTE, GSM, CDMA, WCDMA, Wi-Fi, BT, etc.

Measures against out-of-band interference include maintaining a good grounding concept in the design and adding a GNSS band-pass filter into the antenna input line to the receiver.

For GSM applications, such as typical handset design, an isolation of approximately 20 dB can be reached with careful placement of the antennas. If this is insufficient, an additional SAW filter is required on the GNSS receiver input to block the remaining GSM transmitter energy.

4.7 Layout

This section details layout and placement requirements of the ZED-F9T high accuracy timing receiver.

4.7.1 Placement

GNSS signals at the surface of the Earth are below the thermal noise floor. A very important factor in achieving maximum GNSS performance is the placement of the receiver on the PCB. The placement used may affect RF signal loss from antenna to receiver input and enable interference into the sensitive parts of the receiver chain, including the antenna itself. When defining a GNSS receiver layout, the placement of the antenna with respect to the receiver, as well as grounding, shielding and interference from other digital devices are crucial issues and need to be considered very carefully.

Signal loss on the RF connection from antenna to receiver input must be minimized as much as possible. Hence, the connection to the antenna must be kept as short as possible.

Ensure that RF critical circuits are clearly separated from any other digital circuits on the system board. To achieve this, position digital part of the receiver close to the digital section of the system PCB and place the RF section and antenna as far away from the other digital circuits on the board as possible.

A proper GND concept shall be followed: the RF section shall not be subject to noisy digital supply currents running through its GND plane.

4.7.2 Thermal and mechanical considerations

Temperature-sensitive components, such as TCXOs and crystals, are highly susceptible to sudden changes in ambient temperature, which can negatively impact the GNSS signal tracking. Additionally, mechanical stress and vibration can further degrade performance. For best practices on thermal and mechanical design to enhance GNSS stability and accuracy, and ensure reliable performance in challenging conditions, refer to Table 39.

Topic	Description and design practices
Minimize temperature gradients	Avoid placing the receiver circuitry in the proximity of cooling fans or heat-emitting components, such as power devices. Shield the temperature-sensitive components to reduce air convection and improve thermal stability.
Thermal conduction via the PCB	Use a continuous ground (GND) plane to facilitate uniform heat dissipation and maintain thermal stability. Connect the receiver's ground to the common ground using an inner PCB layer to enhance heat distribution.
External vibration and mechanical stress	Position the receiver circuitry away from sources of vibration. Avoid mechanical stress that could affect TCXO or crystal stability. If necessary, use additional mechanical support points near the receiver or thicken the PCB.

Table 39: Thermal and mechanical considerations

4.7.3 Package footprint, copper and paste mask

This section provides recommendations for copper and solder mask dimensioning for the ZED-F9T module packages.

☞ These are recommendations only and not specifications. The exact copper, solder and paste mask geometries, distances, stencil thickness and solder paste volumes must be adapted to the specific production processes (e.g. soldering etc.).

⚠ PIN 1 indicator is the ground opening, do not route any signal below this pad.

Refer to the applicable Data sheet [1] for the mechanical dimensions.

4.7.3.1 Footprint

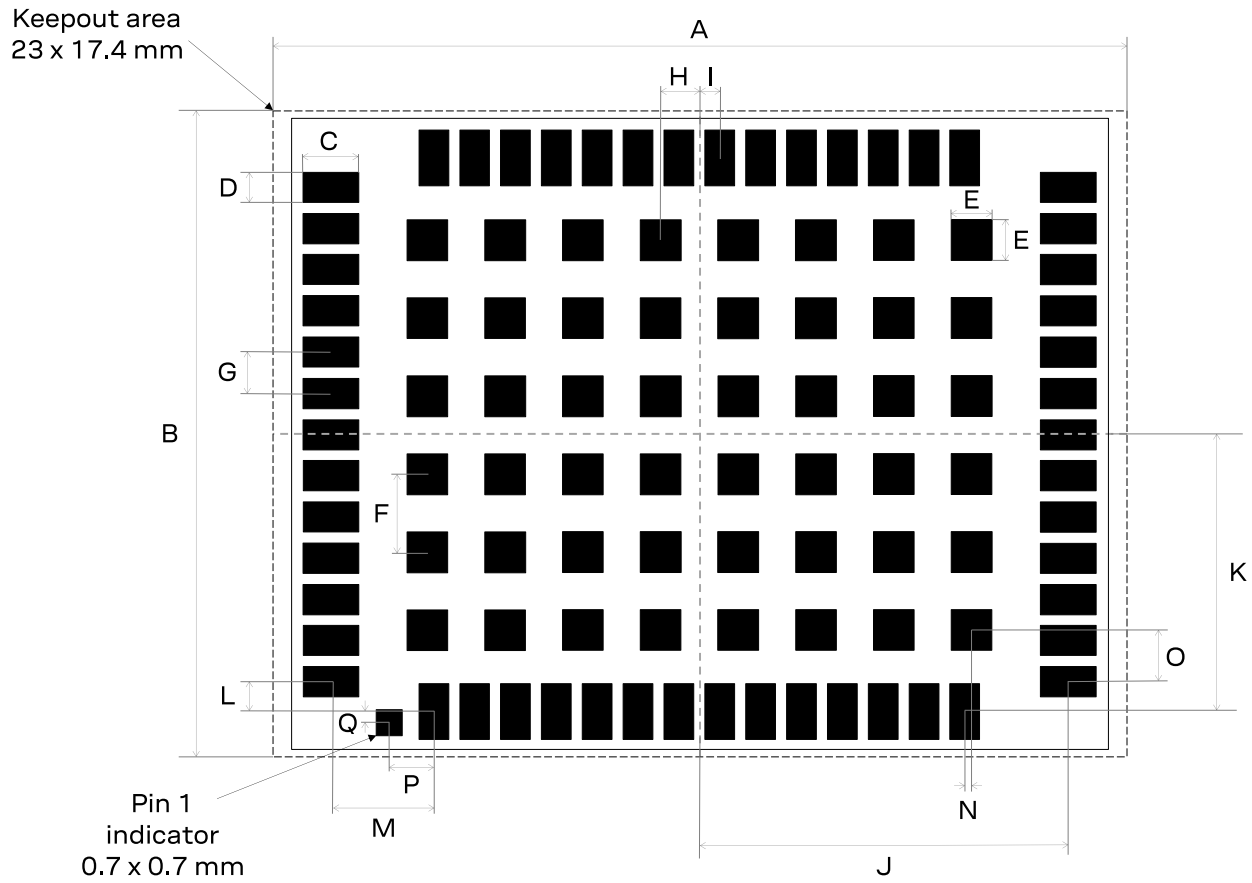

Figure 42: ZED-F9T suggested footprint (i.e. copper mask)

Symbol	Dimension (mm)	Symbol	Dimension (mm)
A	23.00	B	17.40
C	1.50	D	0.80
E	1.10	F	2.10
G	1.10	H	1.05
I	0.55	J	9.95
K	7.45	L	0.85
M	2.80	N	0.20
O	1.35	P	1.20
Q	0.30	-	-

Table 40: ZED-F9T footprint dimensions

4.7.3.2 Paste mask

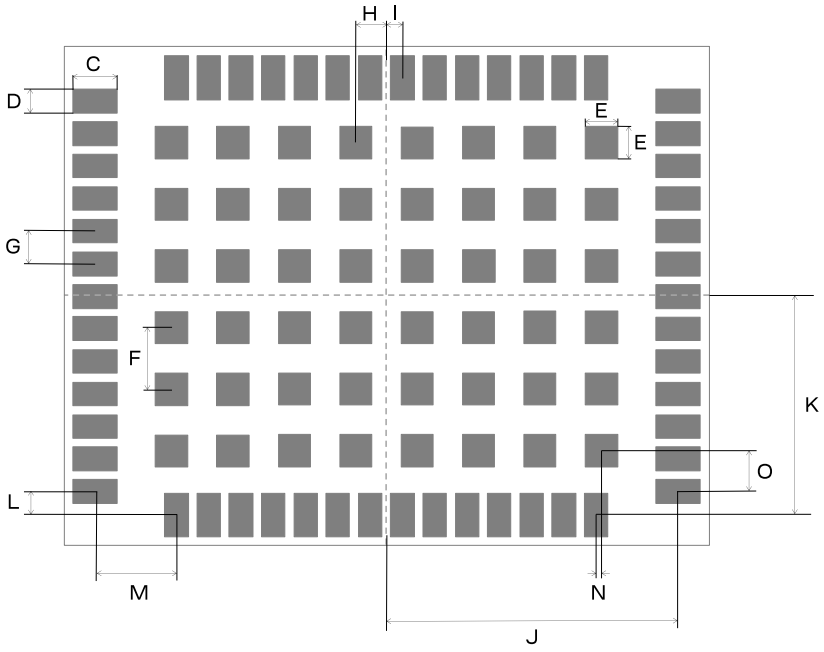

Figure 43: ZED-F9T suggested paste mask

Symbol	Dimension (mm)	Symbol	Dimension (mm)
C	1.55	D	0.75
E	1.05	F	2.10
G	1.10	H	1.05
I	0.55	J	10.00
K	7.50	L	0.90
M	2.85	N	0.20
O	1.35	-	-

Table 41: ZED-F9T paste mask dimensions

4.7.4 Layout guidance

The presented layout guidance reduces the risk of performance issues at design level.

4.7.4.1 RF In trace

The RF in trace has to work in the combined GNSS signal bands.

For FR-4 PCB material with a dielectric permittivity of for example 4.7, the trace width for the 50 Ω line impedance can be calculated.

A grounded co-planar RF trace is recommended as it provides the maximum shielding from noise with adequate vias to the ground layer.

The RF trace must be shielded by vias to ground along the entire length of the trace and the ZED-F9T RF_IN pad should be surrounded by vias as shown in the figure below.

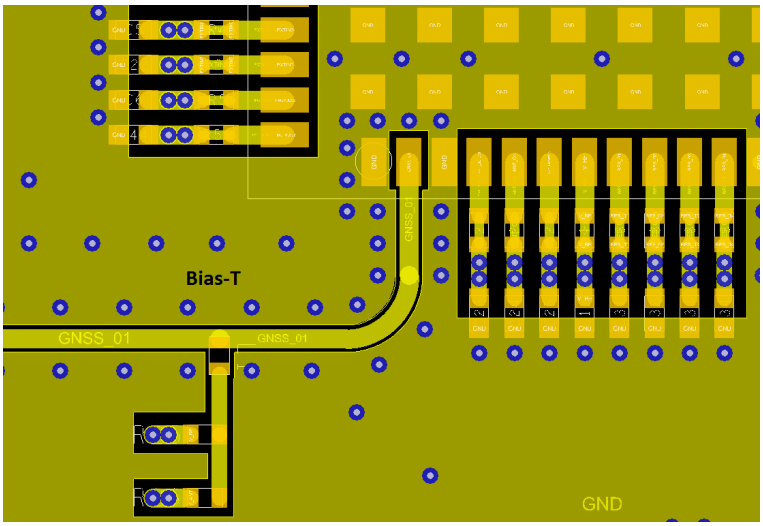

Figure 44: RF input trace

The RF_IN trace on the top layer should be referenced to a suitable ground layer.

4.7.4.2 Vias for the ground pads

The ground pads under the ZED-F9T high accuracy timing receiver need to be grounded with vias to the lower ground layer of the PCB. A solid ground layer fill on the top layer of the PCB is recommended. This is shown in the figure below.

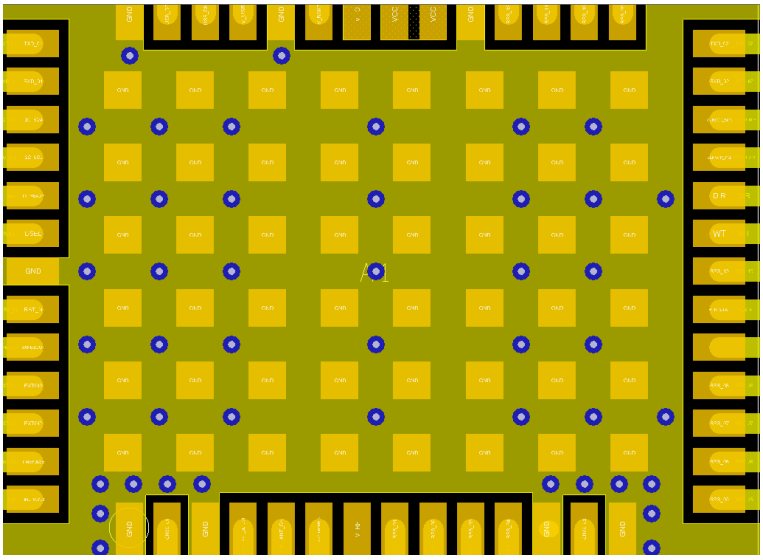

Figure 45: Top layer fill and vias

4.7.4.3 VCC pads

The VCC pads for the ZED-F9T high accuracy timing receiver must have as low impedance as possible with large vias to the lower power layer of the PCB. The VCC pads need a large combined

pad and the de-coupling capacitors must be placed as close as possible. This is shown in the figure below.

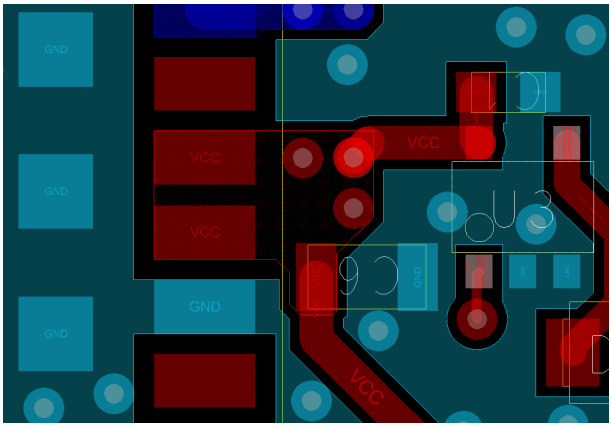

Figure 46: VCC pads

4.8 Design guidance

4.8.1 General considerations

⚠ Do not load Pin 4 (ANT_DETECT) with a capacitance more than 1 nF.

Check power supply requirements and schematic:

- Is the power supply voltage within the specified range and noise-free?
- If USB is not used, connect the V_USB pin to ground.
- It is recommended to have a separate LDO for V_USB that is enabled by the module VCC. This is to comply with the USB self-powered specification.
- If USB is used, is there a 1 uF capacitor right near the V_USB pin? This is just for the V_USB pin.
- Is there a 1 uF cap right next to the module VCC pin?
- Compare the peak current consumption of the ZED-F9T GNSS module with the specification of your power supply.
- GNSS receivers require a stable power supply. Avoid series resistance (less than 0.2 Ω) in your power supply line (the line to VCC) to minimize the voltage ripple on VCC. See the ZED-F9T Power supply section in the Design chapter for more information on the power supply requirements.
- Allow all I/O to Float/High impedance (High-Z) when VCC is not applied.

4.8.2 Backup battery

Check backup supply requirements and schematic:

- For achieving a minimal time to first fix (TTFF) after a power down (warm starts, hot starts), make sure to connect a backup battery to V_BCKP.
- Verify that your battery backup supply can provide the battery backup current specified in the applicable data sheet.
- Allow all I/O including UART and other interfaces to Float/High impedance in HW backup mode (battery backup connected with VCC removed).

4.8.3 RF front-end circuit options

☞ It is important that the RF input is fed by an active antenna meeting the requirements for the ZED-F9T.

The first stages of the signal processing chain are crucial to the overall receiver performance.

An RF input connector can provide a conduction path for harmful or destructive electrical signals. Protect the RF input appropriately when this risk is present.

Additional points on the RF input

- What is the expected quality of the signal source (antenna)?
- What is the external active antenna signal power?
- What is the bandwidth and filtering of the external active antenna?
- Do the external antenna and filtering components meet the group delay variation requirements? This is critical for high accuracy applications such as RTK and timing.

Are destructive RF power levels expected to reach the RF input? Is interference from wireless transmitters expected?

- What are the characteristics of these signals (duty cycle, frequency range, power range, spectral purity)?
- What is the expected GNSS performance under interference conditions?

Is there a risk of RF input exposure to excessive ESD stress?

- In the field: Can the user access the antenna connector?
- PCB / system assembly: Is there risk that statically charged parts (e.g. patch antennas) may be discharged through the RF input?

The following subsections provide several options addressing the various questions above:

☞ In some applications, such as cellular transceivers, interference signals may exceed the maximum power rating of the RF_IN input. To avoid device destruction use of external input protection is mandatory.

☞ During assembly of end-user devices which contain passive patch antennas, an ESD discharge may occur during production when pre-charged antennas are soldered to the GNSS receiver board. In such cases, use of external protection in front of RF_IN is mandatory to avoid device destruction.

ESD discharge cannot be avoided during assembly and / or field use. Note that SAW filters are susceptible to ESD damage. To provide additional robustness an ESD protection diode may be placed at the antenna RF connector to GND.

4.8.4 Antenna/RF input

Check RF input requirements and schematic:

- An OEM active antenna module that meets our requirements should be used if there is a need to integrate the antenna.
- The total maximum noise figure including external LNA (or the LNA in the active antenna) should be around 3 dB.
- Ensure active antenna gain is ideally between 30 - 40 dB gain.
- Make sure the antenna is not placed close to noisy parts of the circuitry and does not face any other noisy elements (for example microcontroller, display).
- Signal levels above 40 C/N0 average are required for optimal RTK performance.
- If a patch type antenna is used, an antenna ground plane with minimum 100 - 150 mm diameter is required.
- Ensure antenna supports both L1 and L2 bands for ZED-F9T-00B or L1 and L5 bands for ZED-F9T-10B or L1, L2 and L5 bands for ZED-F9T-20B.
- Ensure antenna element gain is between 2 and 3 dBic typical for each band.

- Ensure the group delay variation including active antenna is 10 ns max at each GNSS system bandwidth. Note: Inter-signal requirement 50 ns max.
- ESD protection on the RF input is mandatory.
- A Bias-t inductor must be selected with high impedance in the GNSS bands.
- Ensure RF trace is tuned for 50 Ω to ensure adequate bandwidth and power matching.

4.8.5 Ground pads

Ensure the ground pads of the module are connected to ground.

4.8.6 Schematic design

For a **minimal design** with the ZED-F9T GNSS modules, consider the following functions and pins:

- Connect the power supply to VCC and V_BCKP.
- V_USB: If USB is used it is recommended V_USB is to be powered as per USB self-powered mode specification.
- If USB is not used connect V_USB to ground.
- Ensure an optimal ground connection to all ground pins of the ZED-F9T GNSS module.
- Choose the required serial communication interfaces (UART, USB, SPI or I2C) and connect the appropriate pins to your application.
- If you need hot or warm start in your application, connect a backup battery to V_BCKP.
- Antenna bias is required, see ZED-F9T antenna bias section.

4.8.7 Layout design-in guideline

- Is the receiver placed away from heat sources?
- Is the receiver placed away from air-cooling sources?
- Is the receiver shielded by a cover/case to prevent the effects of air currents and rapid environmental temperature changes?
- Is the receiver placed as recommended in the Layout and Layout guidance?
- Assure a low serial resistance on the VCC power supply line (choose a line width > 400 um).
- Keep the power supply line as short as possible.
- Add a ground plane underneath the module to reduce interference. This is especially important for the RF input line.
- For improved shielding, add as many vias as possible around the micro strip/co-planar waveguide, around the serial communication lines, underneath the module, etc.

4.9 I2C design recommendations

The I2C communication bus is based on open-drain/open-collector ICs. Pull-up resistors must be connected from the I2C lines to the supply rails to pull the line high when it's not driven low by the open-drain interface.

The u-blox chip integrates internal pull-up resistors at the SCL and SDA pins. These resistors have a large value variation (chip to chip, over temperature, voltage), see product Data sheet [1]. To minimize timing variations, it is suggested adding external pull-up resistors with lower resistance at the SCL and SDA pins in parallel to the internal ones.

4.9.1 I2C pull up calculation

According to the I2C specification, the electrical input reference levels are set as 30% and 70% of the amplitude. The rise time of the SCL/SDA lines is given by the pull-up resistors and the total bus capacitance.

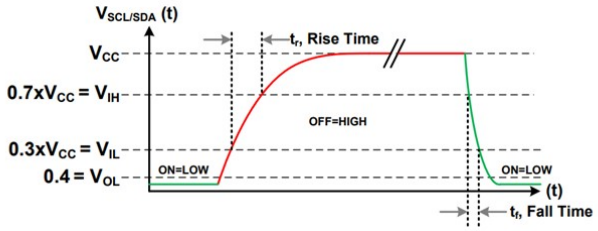

Figure 47: I2C bus signal rise and fall time

The minimum pull up $R_{p(min)}$ resistance is based on the bus voltage (V_{CC}), the maximum voltage that can be read as a logic-low (V_{OL}), and the maximum current that the pins can sink when at or below V_{OL} (I_{OL}).

$R_{p(min)} = (V_{CC} – V_{OL}) / I_{OL}$.

The maximum pull-up resistance is based on the maximum rise-time (t_r) requirement (dependent on the I2C clock frequency) and the total capacitance (C_b) on the bus.

$R_{p(max)} = t_r / (0.8473 * C_b)$.

Example:

For Fast-mode (400 kHz) I2C communication with t_r = 300 ns, bus voltage V_{CC} = 3.3 V, V_{OL} = 0.4 V, I_{OL} = 2 mA and assuming a total bus capacitance (input pad, line trace, filtering etc.) of max 100 pF (the I2C specification lists the maximum total bus capacitance with a pull-up resistor to be 200 pF):

$R_{p(min)} \approx 1.5$ kΩ and $R_{p(max)} \approx 3.5$ kΩ.

For an internal chip pull-up value between 7 kΩ to 30 kΩ, adding an external pull-up resistor of 3 kΩ between the SCL/SDA lines and the IO supply rail results in a total pull-up resistance in the range of 2.1 kΩ (3 kΩ||7 kΩ) to 2.73 kΩ (3 kΩ||30 kΩ).

4.9.2 EMI/EMC considerations for I2C bus

To minimize potential radiated emissions from the I2C lines near GNSS frequencies and address possible I2C timing issues, add filtering capacitors (typically 68 pF) to ground at the SCL and SDA pins or ensure placeholders for the capacitors are provided.

Route the I2C traces away from the PCB edges and connectors to further reduce radiated emissions.

5 Product handling

5.1 ESD handling precautions

⚠ CAUTION! Risk of electrostatic discharge (ESD) damage. u-blox chips and modules are electrostatic sensitive devices containing highly sensitive electronic circuitry. A discharge of static electricity may damage the device or reduce the life expectancy of the device. To avoid ESD damage, adhere to the standard guidelines for handling ESD devices.

Consider the following:

Preventing electrostatic discharge

- Keep components in their original packages during transport.
- Open the package within an ESD-protected area (EPA), as in Figure 48.
- At a workstation, store components in an EPA.
- Place ESD sensitive devices inside of shielding packaging or containers when transported outside of an EPA.
- Use protective clothing and proper personnel grounding at all necessary points when touching electrostatic sensitive device or assembly. For instance, wear ESD-safe clothing and shoes and wear an ESD wrist strap connected to a grounded workstation. Use heel straps when standing on conductive floors or dissipating floor mats.
- Hold the devices by the edges and avoid touching component contacts, pins, or circuitry

Product handling

- When handling RF transceivers and patch antennas, work in an EPA.
- When connecting test equipment or any other electronics to the module (as a standalone or PCB-mounted device), the first point of contact must always be between the local ground and the PCB ground.
- Before mounting a ceramic patch antenna, connect the device to ground.
- When handling the RF pin, do not touch any charged capacitors. Be especially careful when handling materials like patch antennas (~10 pF), coaxial cables (~50-80 pF/m), soldering irons, or any other materials that can develop charges.
- If there is any risk of touching an exposed antenna area in a non-ESD protected work area, implement proper ESD protection measures in the design.
- When soldering RF connectors and patch antennas to the receiver's RF pin, use an ESD-safe soldering iron (tip)

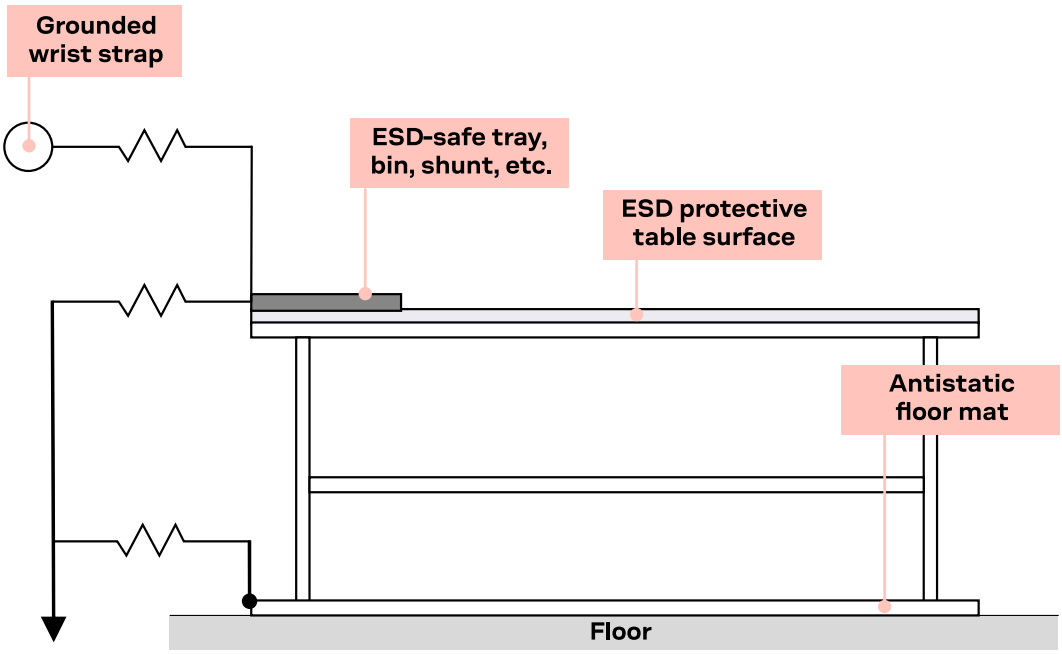

Figure 48: Standard workstation setup for safe handling of ESD-sensitive devices

5.2 Soldering

Soldering paste

Use of “no clean” soldering paste is highly recommended, as it does not require cleaning after the soldering process. For instance, the paste in the example below meets these criteria.

- Soldering paste: OM338 SAC405 / Nr.143714 (Cookson Electronics)
- Alloy specification: Sn 95.5/ Ag 4/ Cu 0.5 (95.5% tin/ 4% silver/ 0.5% copper)
- Melting temperature: 217 °C
- Stencil thickness: The exact geometry, distances, stencil thicknesses and solder paste volumes must be adapted to the customer's specific production processes (e.g. soldering).

Reflow soldering

⚠ CAUTION. Risk of device damage. Exceeding the peak temperature of the recommended soldering profile may permanently damage the device.

The final soldering temperature chosen at the factory depends on additional external factors such as the choice of soldering paste, size, thickness and properties of the base board, etc.

⚠ CAUTION. Risk of device damage. Modules must not be soldered with a damp heat process.

As a reference, see “IPC-7530 Guidelines for temperature profiling for mass soldering (reflow and wave) processes”, published in 2001.

A convection-type soldering oven is highly recommended over the infrared-type radiation oven. Convection-heated ovens allow precise control of the temperature, and all parts will heat up evenly, regardless of material properties, thickness of components and surface color.

☞ To avoid falling off, the modules should be placed on the topside of the board during soldering.

As a reference, see “IPC-7530 Guidelines for temperature profiling for mass soldering (reflow and wave) processes”, published in 2001.

For the recommended soldering profile and conditions, see Figure 49, and Table 42

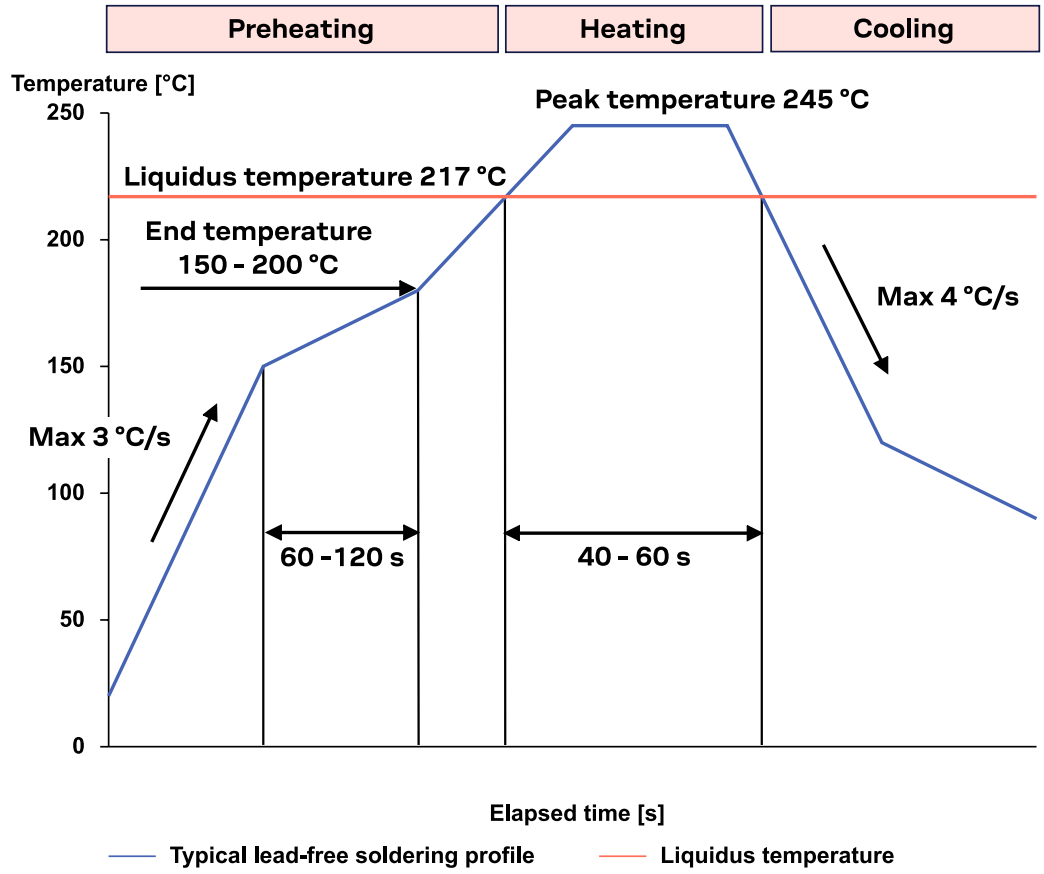

Figure 49: Recommended soldering profile for professional grade ZED-F9T

Phase	Value	Details
Preheating		During the initial heating of component leads and balls, residual humidity is dried out. Note that the preheating phase does not replace prior baking procedures.
Temperature rise rate	Max 3 °C/s	If the temperature rise is too rapid in the preheat phase, excessive slumping may be caused.
Time	60 – 120 s	If the preheating is insufficient, rather large solder balls tend to be generated. Conversely, if performed excessively, fine balls and large balls will be generated in clusters.
End temperature	150 – 200 °C	If the temperature is too low, non-melting tends to be caused in areas containing large heat capacity.
Heating - reflow		The temperature rises above the liquidus temperature of 217 °C. Avoid a sudden rise in temperature as the slump of the paste could become worse.
Time limit above 217 °C liquidus temperature	40 – 60 s	
Peak reflow temperature	245 °C	
Cooling		A controlled cooling prevents negative metallurgical effects of the solder (solder becomes more brittle) and possible mechanical tensions in the products. Controlled cooling helps to achieve bright solder fillets with a good shape and low contact angle.

Phase	Value	Details
Temperature fall rate	Max 4 °C/s	

Table 42: Recommended conditions for reflow soldering

Optical inspection

After soldering the module, consider optical inspection.

Cleaning

☞ Do not clean with water, solvent, or ultrasonic cleaner:

- Cleaning with water will lead to capillary effects where water is absorbed into the gap between the baseboard and the module. The combination of residues of soldering flux and encapsulated water leads to short circuits or resistor-like interconnections between neighboring pads.
- Cleaning with alcohol or other organic solvents can result in soldering flux residues flowing underneath the module, into areas that are not accessible for post-cleaning inspections. The solvent will also damage the sticker and the printed text.

⚠ CAUTION. Risk of device damage. Ultrasonic cleaning permanently damages the module, in particular the quartz oscillators.

The best approach is to use a "no clean" soldering paste and eliminate the cleaning step after the soldering.

Repeated reflow soldering

☞ Repeated reflow soldering processes or soldering the module upside down are not recommended.

A board that is populated with components on both sides may require more than one reflow soldering cycle. In such a case, the process should ensure the module is only placed on the board submitted for a single final upright reflow cycle. A module placed on the underside of the board may detach during a reflow soldering cycle due to lack of adhesion.

The module can also tolerate an additional reflow cycle for rework purposes.

Wave soldering

Base boards with combined through-hole technology (THT) components and surface-mount technology (SMT) devices require wave soldering to solder the THT components. Only a single wave soldering process is encouraged for boards populated with modules.

Rework

⚠ CAUTION. Risk of device damage. Using a hot air gun is an uncontrolled process. It can lead to overheating and severely damage the module. Always avoid overheating the module.

After the module is removed from the oven, clean the pins before reapplying the solder paste, placing the module in the oven and proceeding with the reflow soldering of a new module.

☞ Never attempt to alter the module itself, e.g. by replacing individual components. Such actions immediately void the warranty.

Conformal coating

Certain applications employ a conformal coating of the PCB using HumiSeal® or other related coating products. These materials affect the RF properties of the GNSS module and it is important to prevent them from flowing into the module. The RF shields do not provide 100% protection for the module from coating liquids with low viscosity. Apply the coating carefully.

Conformal coating of the module will void the warranty.

Casting

If casting is required, use viscose or another type of silicon pottant. The OEM is strongly advised to qualify that such processes are suitable for the module before implementing them in the production.

Casting voids the warranty.

Grounding metal covers

Attempts to improve grounding by soldering ground cables, wick or other forms of metal strips directly onto the EMI covers is done at the customer's own risk. The numerous ground pins should be sufficient to provide optimum immunity to interference and noise.

u-blox provides no warranty for damages to the module caused by soldering metal cables or any other forms of metal strips directly onto the EMI covers.

Use of ultrasonic processes

CAUTION. Risk of device damage. Use of any ultrasonic processes (cleaning, welding etc.) may cause damage to the receiver.

u-blox provides no warranty against damages to the module caused by ultrasonic processes.

5.3 Tapes

Figure 50 illustrates the feed direction, component orientation, and tape dimensions (mm). The tape feeds into the pick-and-place machine from the reel on the left side of the figure and moves to the right.

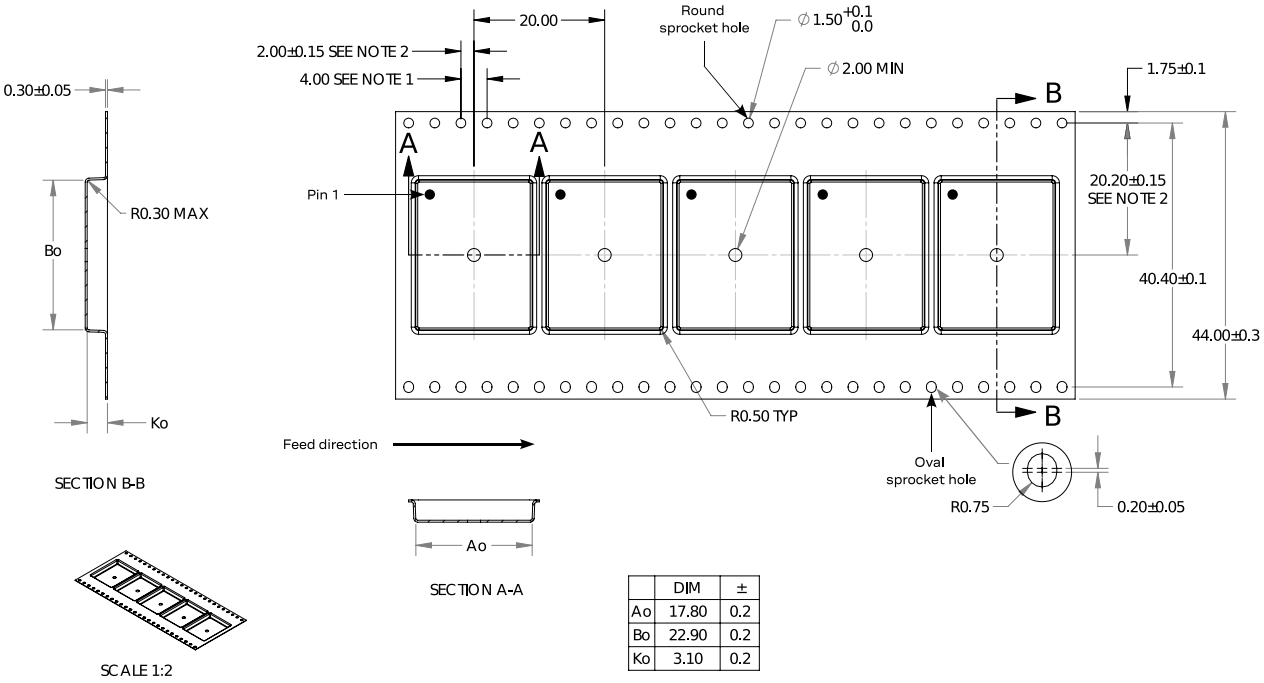

	DIM	±
Ao	17.80	0.2
Bo	22.90	0.2
Ko	3.10	0.2

NOTES:
1. 10 SPROCKET HOLE PITCH CUMULATIVE TOLERANCE ±0.2
2. POCKET POSITION RELATIVE TO SPROCKET HOLE MEASURED AS TRUE POSITION OF POCKET, NOT POCKET HOLE.
3. Ao AND Bo ARE MEASURED ON A PLANE AT A DISTANCE "R" ABOVE THE BOTTOM OF THE POCKET.

Figure 50: ZED-F9T Tape dimensions (mm)

5.4 Reels

The ZED-F9T receivers are deliverable in quantities of 250 pieces on a reel. The receivers are shipped on reel type B , as specified in the Product packaging reference guide [3].

Appendix

A Glossary

Abbreviation	Definition
ANSI	American National Standards Institute
ARP	Antenna reference point
BeiDou	Chinese navigation satellite system
BBR	Battery-backed RAM
CDMA	Code-division multiple access
EMC	Electromagnetic compatibility
EMI	Electromagnetic interference
EOS	Electrical overstress
EPA	Electrostatic protective area
ESD	Electrostatic discharge
Galileo	European navigation satellite system
GLONASS	Russian navigation satellite system
GND	Ground
GNSS	Global navigation satellite system
GPS	Global Positioning System
GSM	Global System for Mobile Communications
I2C	Inter-integrated circuit bus
IEC	International Electrotechnical Commission
NavIC	Indian Regional Navigation Satellite System (IRNSS), NAVigation with Indian Constellation
PCB	Printed circuit board
QZSS	Quasi-Zenith Satellite System
RF	Radio frequency
RTCM	Radio Technical Commission for Maritime Services
SBAS	Satellite-based Augmentation System
SV	Space vehicle, a satellite
TDOP	Time dilution of precision
UBX	u-blox

Related documents

[1] ZED-F9T-00B Data sheet, UBX-18053713
ZED-F9T-10B Data sheet, UBX-20033635
ZED-F9T-20B Data sheet, UBXDOC-963802114-12681

[2] TIM 2.20 Interface description, UBX-21048598
TIM 2.25 Interface description, UBXDOC-963802114-13231

[3] Product packaging reference guide, UBX-14001652

[4] AssistNow service, https://support.thingstream.io

☞ For regular updates to u-blox documentation and to receive product change notifications please register on our homepage https://www.u-blox.com.

Revision history

Revision	Date	Status / comments
R01	11-Jan-2022	Combined Integration Manual issued for ZED-F9T-00B and 10B variants, 3.1.2 NavIC capability included, 3.5.1 baud rate change delay warning, 3.6.4 warning added for time pulse 2-pin usage, 3.8 MGA sec. reduced - interface operation transferred to Services documentation, 3.8.2 data base dump added, 3.9.4 NavIC time base added, 3.10.3 Time Mark message for CVTT added, 3.11.3 security message usage added, 3.12.4 Satellite masking message added.
R02	25-Oct-2024	Added ZED-F9T-20B variant
R03	16-Jan-2025	Updated ZED-F9T-20B firmware to TIM 2.25

R04	15-Jun-2026	Updates:
		• AssistNow service information
		• Timing funtionality:
		  • Moved Differential timing topics to this section
		  • Renamed sub-section header to TIME mode
		• Clarified the usage of Merkle tree root in OSNMA processing
		• Thermal and mechanical considerations section
		• Tapes section

Contact

u-blox AG

Address: Zürcherstrasse 68
8800 Thalwil
Switzerland

For further support and contact information, visit us at www.u-blox.com/support.