# SARA-R5 / SARA-R4 series

## Positioning implementation

Application note

### Abstract

This document describes the implementation of the GNSS interface and aiding clients in u-blox SARA-R5 and SARA-R4 series modules. It also describes the techniques for hybrid positioning and timing indication.



UBX-20012413 - R06
C1-Public

# Document information

| | | |
|---|---|---|
| **Title** | **SARA-R5 / SARA-R4 series** | |
| **Subtitle** | Positioning implementation | |
| **Document type** | Application note | |
| **Document number** | UBX-20012413 | |
| **Revision and date** | R06 | 04-Jul-2023 |
| **Disclosure restriction** | C1-Public | |

This document applies to the following products:

| Product name |
|---|
| SARA-R500S |
| SARA-R510S |
| SARA-R510M8S |
| SARA-R500E |
| SARA-R410M |
| SARA-R412M |
| SARA-R422S |
| SARA-R422M8S |
| SARA-R422M10S |

u-blox or third parties may hold intellectual property rights in the products, names, logos, and designs included in this document. Copying, reproduction, or modification of this document or any part thereof is only permitted with the express written permission of u-blox. Disclosure to third parties is permitted for clearly public documents only.
The information contained herein is provided “as is” and u-blox assumes no liability for its use. No warranty, either express or implied, is given, including but not limited to, with respect to the accuracy, correctness, reliability, and fitness for a particular purpose of the information. This document may be revised by u-blox at any time without notice. For the most recent documents, visit www.u blox.com.
Copyright © u-blox AG.

# Contents

**Document information** ..... **2**
**Contents** ..... **3**
**1 Introduction** ..... **6**
1.1 Scope ..... 6
1.2 AT commands ..... 6
1.3 GNSS aiding features compatibility matrix ..... 7
1.4 IoT Location-as-a-Service ..... 7
**2 Hardware architecture** ..... **8**
2.1 Overview ..... 8
2.2 Modules with integrated GNSS chipset ..... 10
2.2.1 SARA-R510M8S modules ..... 10
2.2.2 SARA-R422M8S modules ..... 14
2.2.3 SARA-R422M10S modules ..... 17
2.3 Modules without integrated GNSS chipset ..... 20
2.3.1 SARA-R500S, SARA-R510S and SARA-R500E modules ..... 20
2.3.2 SARA-R410M, SARA-R412M and SARA-R422S modules ..... 25
2.4 GNSS antenna RF interface ..... 29
2.4.1 Requirements and general guidelines ..... 29
2.4.2 Guidelines for applications with a passive antenna ..... 30
2.4.3 Guidelines for applications with an active antenna ..... 33
2.4.4 Cellular and GNSS RF coexistence ..... 35
**3 Aiding features** ..... **38**
3.1 Overview ..... 38
3.2 Using GNSS without aiding support ..... 40
3.3 Using GNSS with local aiding support ..... 41
3.4 AssistNow aiding service ..... 43
3.4.1 Using GNSS with AssistNow Offline support ..... 43
3.4.2 Using GNSS with AssistNow Online support ..... 46
3.5 Using GNSS with AssistNow Autonomous Support ..... 49
3.6 Using GNSS with combined aiding modes ..... 50
3.7 Aiding result codes ..... 51
**4 GNSS system configuration** ..... **52**
4.1 Modules with integrated GNSS chipset ..... 52
4.1.1 General considerations ..... 52
4.1.2 Power saving modes ..... 53
4.2 GNSS data communication and handling ..... 56
4.2.1 Auxiliary UART interface ..... 57
4.2.2 Multiplexer I/O ..... 57
4.2.3 File System (FS) output ..... 57
4.2.4 Over The Air (OTA) output ..... 57

**5 Time to fix on combo products ... 58**
**6 Hybrid positioning and CellLocate® ... 61**
6.1 Introduction ... 61
6.2 Positioning sensors ... 61
6.3 Basic functionality ... 63
6.4 GNSS sensor setup ... 65
6.5 Cellular sensor setup ... 66
6.5.1 Cellular location sensor +ULOCCELL ... 66
6.5.2 Localization information request +ULOCIND ... 66
6.6 AT command examples ... 66
6.7 Best practices for CellLocate® (+ULOC) ... 67
6.8 How to implement a data collection unit ... 68
6.8.1 Initialization ... 68
6.8.2 Loop ... 69
6.9 Best practices for a data collection unit ... 69
**7 Time information from cellular modules ... 70**
7.1 Sources of timing information ... 70
7.2 Interface of timing information to the application ... 71
7.3 Usage models ... 71
7.3.1 LTE for measuring timing intervals in a sensor ... 71
7.3.2 LTE bridging GNSS as a temporary fallback ... 72
7.3.3 Relative timing between modules ... 73
7.3.4 Modules distributed over a wide area ... 74
7.3.5 Local anchor with GNSS giving accurate time ... 75
7.4 Application interface ... 76
7.4.1 Time information +UTIME ... 76
7.4.2 Time information request +UTIMEIND ... 77
7.4.3 UTIME configuration +UTIMECFG ... 77
7.4.4 Synchronization on a specific cell of any MNO +UTIMECELLSELECT ... 77
7.5 Expected performance ... 78
7.6 AT commands examples ... 79
7.6.1 Activation of UTIME- PPS mode ... 79
7.6.2 Activation of UTIME – One shot mode ... 79
7.6.3 Activation of UTIME – Timestamping of external interrupts mode ... 80
7.6.4 Synchronize two modules using LTE frame ... 80
7.6.5 Synchronization on a specific cell (+UTIMECELLSELECT) and activate +UTIME- PPS mode 81
7.6.6 Synchronization on a specific cell without RACH request (+UTIMECELLSELECT) and activate +UTIME – PPS mode ... 81
7.7 Best practices for time information (+UTIME, +UTIMECELLSELECT) ... 82
**Appendix ... 83**
**A Compatibility matrices ... 83**
A.1 Cellular module and GNSS receiver compatibility matrix ... 83

A.2 “GNSS Tx data ready” compatibility matrix ....83
A.3 AssistNow Autonomous compatibility matrix ....85
**B CellLocate® customer proxy server .... 85**
**C AssistNow performance .... 86**
**D GNSS UBX messages used in u-blox cellular modules .... 86**
**E Glossary .... 89**
**Related documentation .... 90**
**Revision history .... 90**
**Contact .... 90**

# 1 Introduction

## 1.1 Scope

This document describes how to use the GNSS interface and control functionalities and aiding clients in u-blox cellular modules.

The following sections describe:

- Hardware and software architecture implemented in the cellular module for connecting u-blox positioning chips and modules to u-blox cellular modules
- Implementation of aiding clients. Aiding clients are software tools in the cellular modules, providing improvement of GNSS performance
- Hybrid positioning and CellLocate® features. These features provide location information when the GNSS signal is weak or absent
- How different usage (aiding and hybrid positioning) impact the cost of the service for the user.
- Timing features. The cellular modules provide time information obtained from the internal/external GNSS receiver or derived from the synchronization between the cellular module and the base station (BS).

## 1.2 AT commands

Table 1 lists the AT commands described in this document:

| AT command | Description |
|---|---|
| **GNSS configuration** | |
| +UGPS | GNSS power management configuration |
| +UGIND | Assisted GNSS unsolicited indication |
| +UGPRF | GNSS profile configuration |
| **Aiding feature configuration** | |
| +UGSRV | Aiding server configuration |
| +UGAOS | GNSS aiding request command |
| **NMEA string configuration** | |
| +UGUBX | Send of UBX string |
| **Hybrid positioning and CellLocate ® configuration** | |
| +ULOC | Ask for localization information (CellLocate®) |
| +ULOCGNSS | Configure GNSS sensor (CellLocate®) |
| +ULOCCELL | Configure cellular location sensor (CellLocate®) |
| +ULOCIND | Localization information request status unsolicited indication (CellLocate®) |
| **Time information configuration** | |
| +UTIME | Ask for time information from cellular modem (CellTime) |
| +UTIMEIND | Time information request status unsolicited indication (CellTime) |
| +UTIMECFG | Sets the UTIME configuration parameters (CellTime) |
| **GPIO interface configuration** | |
| +UGPIOC | GPIOs configuration, including GPIOs with GNSS and timing functionality |

**Table 1: AT commands related with positioning and timing features**

For a complete description of AT commands syntax, see u-blox SARA-R5 series AT commands manual [3] and u-blox SARA-R4 series AT commands manual [4].

## 1.3 GNSS aiding features compatibility matrix

u-blox cellular modules feature u-blox A-GNSS services (AssistNow Online, AssistNow Offline) for faster and more accurate GNSS performance.

Support of the different types of embedded GNSS aiding features can vary depending on the u-blox cellular module series and version. See Table 2 for a complete overview of the aiding modes supported by u-blox cellular modules.

| u-blox cellular module | Local aiding | AssistNow Online | AssistNow Offline | AssistNow Autonomous |
|---|---|---|---|---|
| SARA-R500S | YES | YES | YES | YES |
| SARA-R510S | YES | YES | YES | YES |
| SARA-R510M8S | YES | YES | YES | YES |
| SARA-R500E | YES | YES | YES | YES |
| SARA-R410M | YES | YES | YES | YES |
| SARA-R412M | YES | YES | YES | YES |
| SARA-R422S | YES | YES | YES | YES |
| SARA-R422M8S | YES | YES | YES | YES |
| SARA-R422M10S | YES | YES | YES | YES |

**Table 2: GNSS aiding feature compatibility matrix**

## 1.4 IoT Location-as-a-Service

IoT Location-as-a-Service (LaaS) enables devices with the appropriate token to make location requests to the u-blox location services. IoT LaaS is available in three plans, each which includes a specific number of location requests for a given price per token per month, as defined in Thingstream IoT Location-as-a-Service pricing [16]. The plans are divided between:

- AssistNow Online
- AssistNow Offline
- CellLocate®

AssistNow delivers satellite data to accelerate position calculation and CellLocate® provides position based on surrounding cell tower data.

☞ When operating the GNSS receiver in assisted mode from the cellular module (see section 3), requests are mapped to AssistNow Online/Offline plans.

☞ When using hybrid positioning and CellLocate® (see section 5), requests may be mapped to AssistNow or CellLocate plans depending on the presence of the assistance.

- The CellLocate plan is charged when asking for a position estimation without assistance for the GNSS receiver. In this case the device will not contribute to the CellLocate® database by submitting a GNSS fix plus the cell visibility info.

# 2 Hardware architecture

## 2.1 Overview

Combining u-blox cellular and GNSS technologies gives designers full access to the GNSS system directly via the cellular system, so a second communication interface connected to the GNSS system is unnecessary.

The SARA-R5 series includes the SARA-R510M8S modules that integrate the u-blox M8 GNSS system (see section 2.2.1), and the SARA-R500S, SARA-R510S and SARA-R500E modules that can be combined with an external u-blox M8 GNSS system (see section 2.3.1).

The SARA-R4 series includes the SARA-R422M8S and SARA-R422M10S modules that integrate the u-blox M8 and the u-blox M10 GNSS system respectively (see sections 2.2.2 and 2.2.3), and the SARA-R410M, SARA-R412M and SARA-R422S modules that can be combined with an external u-blox GNSS system (see section 2.3.2).

SARA-R5 and SARA-R4 series modules are designed to be controlled and operated by AT commands sent over the UART interfaces. SARA-R410M and SARA-R412M modules can also be controlled and operated by AT commands sent over the USB interface. Table 1 lists the main AT commands related with positioning and timing functionalities for the SARA-R5 and SARA-R4 series modules.

Depending on the selected configuration for the UART interfaces, the AT interface can be available over the first primary UART interface of SARA-R5 and SARA-R4 series modules and/or over the second auxiliary UART interface of the SARA-R5 series, SARA-R422M10S, SARA-R422M8S and SARA-R422S modules, to control and operate both the cellular and the GNSS systems from an external host processor. For more details, see the related u-blox AT commands manual [3][4], +USIO and +CMUX AT commands.

Figure 1 illustrates some examples of connecting an external application host processor with the u-blox cellular system, which is then connected with the u-blox GNSS system.

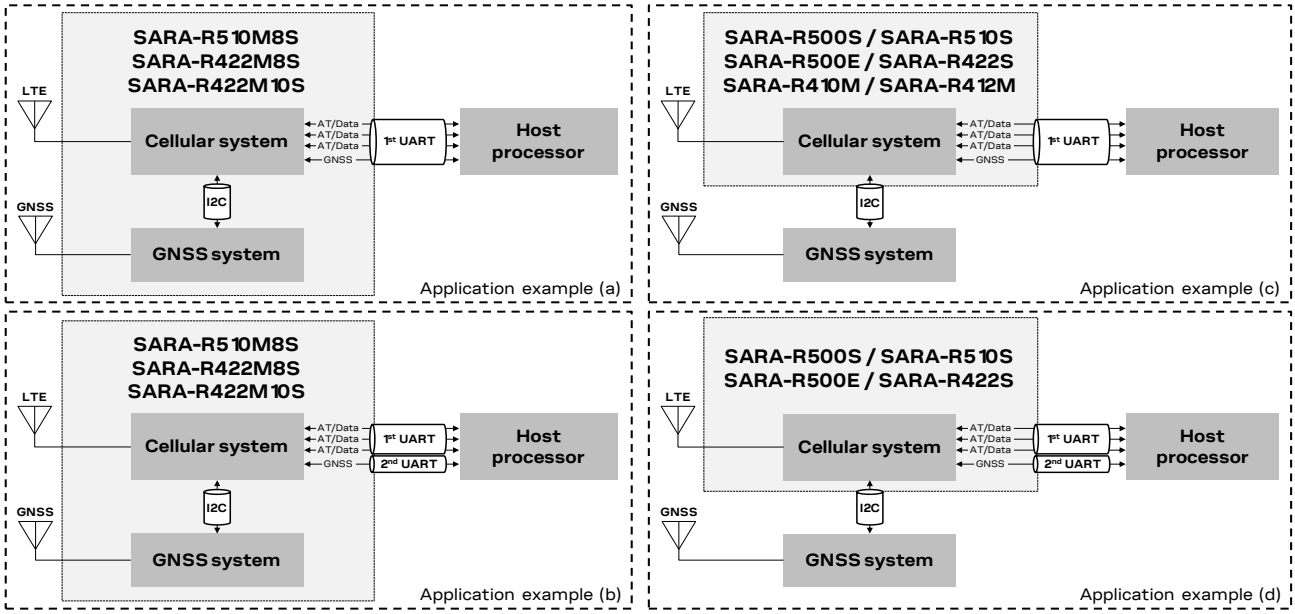


**Figure 1: Examples of connection with an external host processor**

GNSS control messages are relayed from the cellular system to the GNSS system via the I2C interface. The external application host processor can send UBX protocol messages to the GNSS system over the AT interface, embedded in the `+UGUBX` AT command, or over the GNSS tunneling virtual channel (except SARA-R410M and SARA-R412M), which can be made available on the first

primary UART physical interface in multiplexer mode or over the second auxiliary UART physical interface (see the `+CMUX`, `+USIO` and `+UGPRF` AT commands in u-blox AT commands manual [3][4]). The external host processor can get GNSS data, as NMEA and proprietary UBX protocol messages, over the GNSS tunneling virtual channel. Other options for GNSS data handling are available as illustrated in section 4.

In addition to the main communication interfaces illustrated in Figure 1, further lines are available for the GNSS system control and operation, and for timing functionalities.

The hardware architecture and all the electrical interfaces for positioning and timing operations are illustrated in detail in section 2.2 and 2.3.

Guidelines for GNSS RF design, and in particular guidelines for cellular and GNSS RF coexistence, are illustrated in detail in section 2.4.

Table 3 illustrates a quick comparison between cellular / GNSS combo solutions and cellular / GNSS stand-alone solutions, indicating the best solution considering some common use cases. The combo solutions include SARA-R510M8S, SARA-R422M8S or SARA-R422M10S modules with integrated GNSS system; the stand-alone solutions include stand-alone SARA-R5 or SARA-R4 module without integrated GNSS and a stand-alone u-blox GNSS system. The examples are not exhaustive, and do not represent all possible scenarios. Each real use case must be carefully analyzed to decide the most suitable solution.

| Use case examples | Products with integrated GNSS | Products without integrated GNSS | Comments |
|---|---|---|---|
| • Continuous tracking<br>• No power constraints<br>• Cellular and GNSS used at the same time | Best solution | Possible solution | A cellular / GNSS combo is the best solution for continuous tracking thanks to the dual-chip design, performance and concurrent cellular and GNSS functionality.<br>Stand-alone cellular / GNSS systems is an option when more flexibility and/or additional features are needed. |
| • Position is not sent via cellular every time<br>• Power constrained application<br>• Cellular and GNSS not used at the same time | Possible solution | Best solution | Stand-alone cellular / GNSS systems is the right solution to save the single mWh, if concurrent cellular and GNSS operation is not needed.<br>A cellular / GNSS combo is a good trade-off for energy vs price and size. |
| • Position sent via cellular every time<br>• Power constrained application<br>• ON/OFF mode | Best solution | Possible solution | A cellular / GNSS combo is more efficient thanks to the parallel operation of cellular and GNSS that minimizes execution time.<br>Stand-alone cellular / GNSS systems is an option when more flexibility and/or additional features are needed. |

**Table 3: Comparison between combos and stand-alone solutions in use case examples**

## 2.2 Modules with integrated GNSS chipset

### 2.2.1 SARA-R510M8S modules

#### 2.2.1.1 Overview

☞ The communication with an external u-blox GNSS system is not supported by SARA-R510M8S modules with integrated GNSS system based on the u-blox UBX-M8030 chipset.

Figure 2 illustrates the main internal architecture elements of the GNSS system integrated in the SARA-R510M8S modules, based on the u-blox UBX-M8030 chipset with ROM SPG 3.01 version, also including a dedicated Surface Acoustic Wave (SAW) filter and a Low Noise Amplifier (LNA) to improve GNSS performance and jamming immunity against possible strong out-of-band jammers close to the GNSS antenna, such as the cellular antenna.

The cellular system, based on the u-blox UBX-R5 chipset, is internally connected with the GNSS system by the 1.8 V I2C-bus compatible interface, acting as communication interface between the two systems, while the external application host processor can communicate with the cellular and the GNSS systems over the available UART interfaces as also illustrated in Figure 1.

Since the cellular and the GNSS systems do not share the same RF path, the SARA-R510M8S modules guarantee cellular and GNSS concurrent operations. No time-sharing is required for GNSS and cellular operations: the GNSS system operates independently, and it is possible to obtain the GNSS position while cellular transmission / reception operations are in progress.

Additionally, the GNSS system can be accessed through the cellular chipset also while the LTE modem is in the power saving configuration enabled by the `+UPSV` AT command, in the eDRX mode enabled by the `+CEDRXS` AT command, in the airplane mode enabled by the `+CFUN` AT command, or in the Power Saving Mode (PSM) mode enabled by the `+CPSMS` AT command. For further details on these AT commands, see the u-blox SARA-R5 series AT commands manual [3].

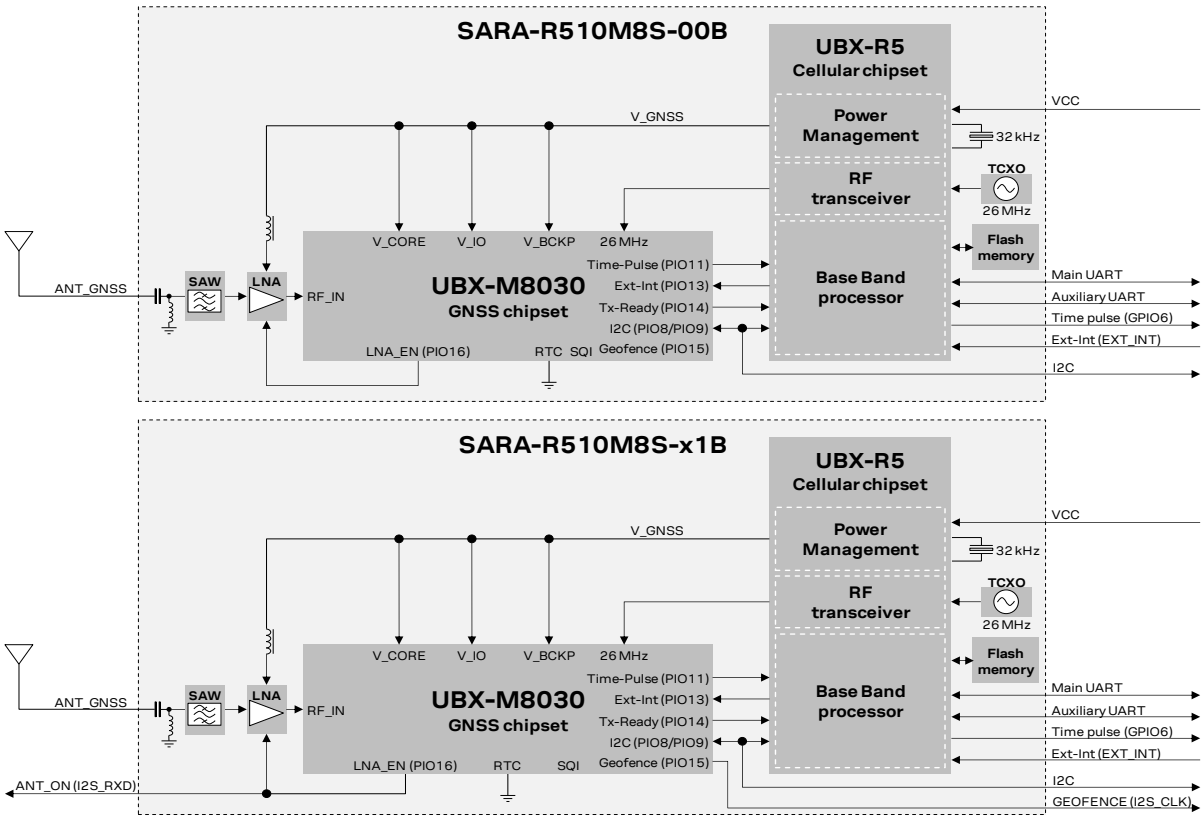


**Figure 2: SARA-R510M8S modules GNSS section block diagram**

The SARA-R510M8S modules, as LTE + GNSS combo, represent a cost-effective and size-optimized solution, compared with a standalone GNSS system + standalone LTE system. Beside integrating the u-blox UBX-M8030 chipset, dedicated SAW filter, LNA and related matching components passive parts, the SARA-R510M8S modules also include the Power Management, the reference clock (TCXO), and the flash memory that are part of the cellular system but used for the GNSS system too, allowing reduced parts count and compact PCB area.

The whole internal GNSS subsystem is by default not powered at the boot of the SARA-R510M8S module.

Once the `<mode>` parameter of the `+UGPS` AT command is set to 1 by the external application host processor, the cellular processor enables the 1.8 V supply voltage for the GNSS system using as source a dedicated voltage supply generated by the cellular power management; the GNSS system switches on, the RF transceiver integrated in the cellular chipset makes available to the GNSS system the 26 MHz reference clock as generated by the related TCXO. Then the cellular processor can make available to the GNSS system all the relevant GNSS data as up-to-date time reference, the position, almanac and ephemeris data, which are saved in the related flash memory that is part of the cellular system (see section 3.3).

Once the GNSS system is operative, the u-blox UBX-M8030 GNSS chipset is responsible for enabling the internal LNA as required, acquiring, decoding, and processing concurrent GNSS satellite signals, and sending the related GNSS data to the cellular system processor.

Note that, due to the internal hardware architecture of the SARA-R510M8S module illustrated in Figure 2, only a subset of UBX protocol messages supported by the u-blox UBX-M8030 GNSS chipset are suitable for the implemented hardware architecture.

Considering there is no flash memory directly connected to the internal u-blox UBX-M8030 GNSS chipset, the UBX-CFG-RINV messages for Remote Inventory, the UBX-LOG messages for Data Logging, and the UBX-UPD messages for Firmware Update are not suitable for the implemented hardware architecture, as indicated in Table 4.

| UBX Class Id | UBX Message Id | Description |
|---|---|---|
| UBX-CFG (0x06) | CFG-RINV (0x34) | Contents of Remote Inventory |
| UBX-LOG (0x21) | All messages | Logging Messages |
| UBX-UPD (0x09) | All messages | Firmware Update Messages |

**Table 4: UBX messages not supported by the SARA-R510M8S module**

Considering there is no RTC circuit implemented directly connected to the u-blox UBX-M8030 chipset, the GNSS ON/OFF power save mode (PSMOO) is not supported, while the GNSS cyclic tracking power save mode (PSMCT) is supported and a special procedure is required to activate it. For more details, see section 4.1.2.

See section 4 for further details about the possible configurations for the internal GNSS system, and see the u-blox M8 receiver description including protocol specification [10].

As illustrated in Figure 2, the following 1.8 V peripheral input output directly connected to the internal u-blox UBX-M8030 chipset are available on the SARA-R510M8S-01B modules product version:

- The **ANT_ON** line, over the **I2S_RXD** pin of the module, consisting in the LNA or active antenna power control output (PIO16) of the internal u-blox UBX-M8030 chipset, that can provide optional control for switching off power to an external active GNSS antenna or an external separate LNA. This facility is provided to help minimize power consumption in power save mode operation.
- The **GEOFENCE** line, over the **I2S_CLK** pin of the module, consisting in the PIO15 of the u-blox UBX-M8030 chipset, can provide optional indication of the geofencing status and can be used, for example, to wake up a host on activation.

As previously mentioned, the GNSS system can be accessed through the cellular chipset also while the LTE modem is in the power saving configuration, eDRX, airplane, or PSM mode. In these cases, the current consumption of the whole module will be mainly due to specific operating mode of the GNSS system (as acquisition, continuous tracking or cyclic tracking mode), and it will be partially due to the sub-section of the cellular system making available the 26 MHz clock for the GNSS system.

Indicative **VCC** current consumption data for the SARA-R510M8S module with GNSS system in specific operating modes are available in the u-blox SARA-R5 series data sheet [1].

As long as the GNSS system is in operation, the module does not enter the ultra-low power deep sleep mode, even if the LTE modem is in PSM or in eDRX.

Once the <mode> parameter of the +UGPS AT command is set to 0 by the external application host processor, the whole internal GNSS system is being switched off as controlled by the cellular system, and all the relevant GNSS data as position, almanac and ephemeris, are being saved in the Flash memory that is part of the cellular system. Then, the module can enter the ultra-low power deep sleep mode when the LTE modem is in PSM or in eDRX. In this condition, or when the module is switched off, only the RTC block of the cellular system is operational, keeping the reference time updated with negligible current consumption while feeding power through the **VCC** main supply input of the SARA-R510M8S module.

Upon module wake-up from the ultra-low power deep sleep mode, or upon module switch-on, once the <mode> parameter of the +UGPS AT command is set again to 1 by the external application processor, all the relevant GNSS data are fetched again by the cellular UBX-R5 chipset and they are provided to the GNSS system with up-to-date time reference.

Therefore, feeding power through the **VCC** input of the SARA-R510M8S module when the internal GNSS subsystem is switched off, or when the whole module is in the ultra-low power deep sleep mode or switched off, may be seen as similar of supplying a voltage on the V_BCKP pin of a stand-alone GNSS receiver, considering that all the relevant GNSS data are stored in the Flash memory of the module instead of be saved in the back-up RAM of the GNSS receiver, and the time reference clock is maintained by the cellular subsystem.

☞ It is recommended to provide accessible test point directly connected to the AUX UART pins, at least on the **DCD** data output pin of the AUX UART interface, to get data form the GNSS system with the AUX UART configured in GNSS tunneling mode, for GNSS diagnostic purpose.

#### 2.2.1.2 GNSS Tx data ready

Figure 2 illustrates also an internal connection implemented for current consumption optimization: the PIO14 of the u-blox UBX-M8 GNSS chipset is internally connected to the u-blox UBX-R5 cellular chipset to provide the additional internal “GNSS Tx data ready” functionality, which can be enabled by using the `+UGPRF` AT command (see section 4.1.2.1 for an AT commands procedure example).

This feature allows an optimization of the power consumption of the module: once the power saving configuration is enabled by the `+UPSV` AT command, the cellular system enters low power idle mode whenever possible, and the GNSS system can wake up the cellular system only when is ready to send GNSS data over the I2C interface.

#### 2.2.1.3 Timing functionalities

The following Figure 3, as well as the previous Figure 2, illustrates internal and external connections implemented for timings functionalities: the PIO13 (EXTINT) pin and the PIO11 (TIMEPULSE) pin of the u-blox UBX-M8 GNSS chipset are internally connected to the u-blox UBX-R5 cellular chipset to provide GNSS timing functionalities, while the **GPIO6** pin, the **EXT_INT** pin and UART interfaces pin of the SARA-R510M8S module represent the external connections available for timings functionalities, as summarized in Table 5.

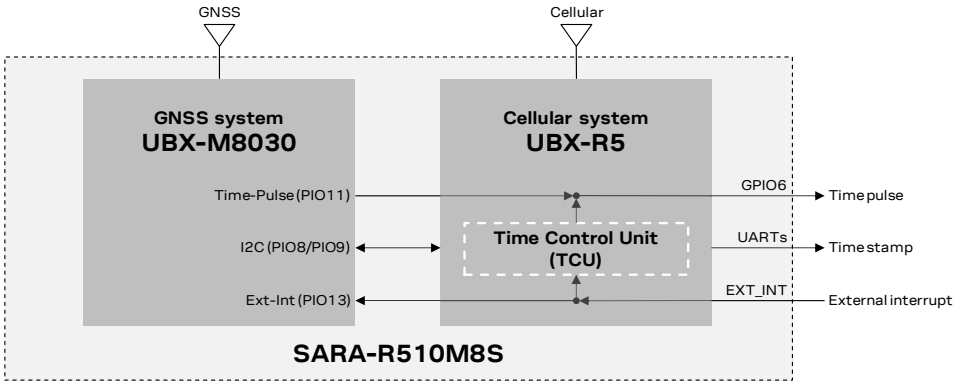


**Figure 3: SARA-R510M8S modules timing functionalities block diagram**

| Function | Description | Default GPIO | Configurable GPIOs |
|---|---|---|---|
| Time pulse output | Output providing accurate time reference, as a time pulse sequence with 1 PPS or as a single time pulse, based on the GNSS system or the LTE system | - | GPIO6 |
| Timestamp of external interrupt | Input triggering via interrupt the generation of an URC time stamp over AT serial interface, using the time reference from the GNSS system or the LTE system | - | EXT_INT |

**Table 5: Pins of SARA-R510M8S modules supporting timing functionalities**

The time control unit (TCU) integrated into the u-blox UBX-R5 cellular chipset is responsible for updating and distributing timing information within the module and to the AT interface. Moreover, the TCU keeps track and coordinates all the module's time sources, consisting of the GNSS system or in the LTE modem autonomous time propagation.

Timing information can be retrieved from the module by the `+UTIME` AT command in the form of:

- A time pulse
- Unsolicited result codes (URC) sent over AT interface, with the corresponding time information
- An estimation of the time accuracy

For further details of the `+UTIME` AT command, see section 6.9 and the SARA-R5 series AT commands manual [3].

The **GPIO6** pin of the SARA-R510M8S module can be configured to provide the "Time pulse output" functionality, consisting of a time reference provided for the external application in the form of continuous PPS (pulse-per-second) output sequence, or single output pulse with time stamp sent as URC over UART AT interface containing the date and time when the pulse occurred and an estimation of the time accuracy. The time information may come from the GNSS system (using the internal connection illustrated in Figure 3), or from the LTE modem system. For further details, see section 6.9, and the SARA-R5 series AT commands manual [3], `+UGPIOC <gpio_mode>=22`, and `+UTIME` AT commands.

The **EXT_INT** pin of the SARA-R510M8S module can be configured to provide the "Time stamp of external interrupt" functionality, consisting of timing information provided for the external application in the form of an URC sent over AT interface once triggered by a rising edge applied to the **EXT_INT** input pin. When an interrupt is received by the module at the **EXT_INT** input pin, it is timestamped by the TCU using the most accurate time source available, from the GNSS system (using the internal connection illustrated in Figure 3), or from the LTE system. For further details, see section 6.9, and the SARA-R5 series AT commands manual [3], `+UGPIOC <gpio_mode>=23`, and `+UTIME` AT commands.

### 2.2.2 SARA-R422M8S modules

#### 2.2.2.1 Overview

☞ The communication with an external u-blox GNSS system is not supported by SARA-R422M8S modules with integrated GNSS system based on the u-blox UBX-M8030 chipset.

Figure 4 illustrates the main internal architecture elements of the GNSS system integrated in the SARA-R422M8S modules, based on the u-blox UBX-M8030 chipset with ROM SPG 3.01 version, also including a dedicated surface acoustic wave (SAW) filter and a low noise amplifier (LNA) to improve GNSS performance and jamming immunity against strong out-of-band jammers close to the GNSS antenna, such as the cellular antenna.

The cellular system processor is internally connected with the GNSS system by the 1.8 V I2C-bus compatible interface, acting as communication interface between the two systems, while the external application host processor can communicate with the cellular and the GNSS systems over the available UART interfaces as illustrated in Figure 1.

Since the cellular and the GNSS systems do not share the same RF path, the SARA-R422M8S modules guarantee cellular and GNSS concurrent operations. No time-sharing is required for GNSS and cellular operations: the GNSS system operates independently, and it is possible to obtain the GNSS position while cellular transmission / reception operations are in progress.

Additionally, the GNSS system can be accessed through the cellular chipset also while the cellular modem is in the power saving configuration enabled by the `+UPSV` AT command, in the eDRX mode enabled by the `+CEDRXS` AT command, in the airplane mode enabled by the `+CFUN` AT command, or in the Power Saving Mode (PSM) mode enabled by the `+CPSMS` AT command. For further details on these AT commands, see the u-blox SARA-R4 series AT commands manual [4].

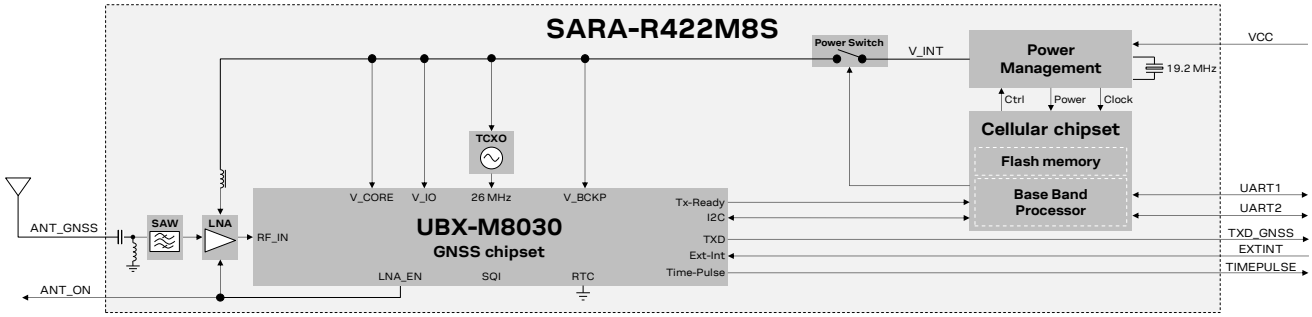


**Figure 4: SARA-R422M8S modules GNSS section block diagram**

SARA-R422M8S modules, as Cellular + GNSS combo, represent a cost-effective and size-optimized solution, compared with a standalone GNSS + standalone Cellular system. Beside integrating the u-blox UBX-M8030 chipset, dedicated TCXO, SAW filter, LNA and related matching components passive parts, the SARA-R422M8S modules also include the power management and the flash memory that are part of the cellular system but used for the GNSS system too, allowing reduced parts count and compact PCB area.

The whole internal GNSS subsystem is by default not powered at the boot of the SARA-R422M8S module.

Once the `<mode>` parameter of the `+UGPS` AT command is set to 1 by the external application host processor, the cellular processor provides the 1.8 V supply voltage for the GNSS system using as source the **V_INT** supply generated by the cellular power management, switching on the GNSS system, and then the cellular processor can provide to the GNSS system all the relevant GNSS data as up-to-date time reference, the position, almanac and ephemeris data, which are saved in the related flash memory that is part of the cellular system (see section 3.3).

Once the GNSS system is operative, the u-blox UBX-M8030 GNSS chipset is responsible for enabling the internal LNA as required, acquiring, decoding, and processing concurrent GNSS satellite signals, and sending the related GNSS data to the cellular system processor.

Note that, due to the internal hardware architecture of the SARA-R422M8S module illustrated in Figure 4, only a subset of UBX protocol messages supported by the u-blox UBX-M8030 GNSS chipset are suitable for the implemented hardware architecture.

Considering there is no flash memory directly connected to the SQI interface of the internal u-blox UBX-M8030 GNSS chipset, the UBX-CFG-RINV messages for Remote Inventory, the UBX-LOG messages for Data Logging, and the UBX-UPD messages for Firmware Update are not suitable for the implemented hardware architecture as indicated in Figure 4.

| UBX Class Id | UBX Message Id | Description |
|---|---|---|
| UBX-CFG (0x06) | CFG-RINV (0x34) | Contents of Remote Inventory |
| UBX-LOG (0x21) | All messages | Logging Messages |
| UBX-UPD (0x09) | All messages | Firmware Update Messages |

**Table 6: UBX messages not supported by the SARA-R422M8S module**

Considering there is no RTC circuit implemented directly connected to the u-blox UBX-M8030 chipset, the GNSS ON/OFF power save mode (PSMOO) is not supported, while the GNSS cyclic tracking power save mode (PSMCT) is supported and a special procedure is required to activate it. For more details, see section 4.1.2.

See section 4 for further details about the possible configurations for the internal GNSS system, and see the u-blox M8 receiver description including protocol specification [10].

As previously mentioned, the GNSS system can be accessed through the cellular chipset also while the LTE modem is in the power saving configuration, eDRX, airplane, or PSM mode. In these cases, the current consumption of the whole module will be mainly due to specific operating mode of the GNSS system (i.e., acquisition, continuous tracking, or cyclic tracking mode), and it will be partially due to the sub-section of the cellular system keeping available the GNSS system.

As illustrated in Figure 4, the following 1.8 V peripheral input output directly connected to the internal u-blox UBX-M8030 chipset are available on the SARA-R422M8S modules:

- The **TXD_GNSS** line, consisting in the UART data output (PIO6) of the internal u-blox UBX-M8030 chipset, allowing to get all the GNSS data directly from the GNSS system as alternative option of getting the GNSS data through the UART interfaces internally connected to the cellular processor. This facility is provided to help minimize power consumption in power save mode operation.
- The **EXTINT** line, consisting in the external interrupt (PIO13) of the internal u-blox UBX-M8030 chipset, that can be used to control the GNSS receiver or for aiding.
- The **TIMEPULSE** line, consisting in the time pulse output (PIO11) of the internal u-blox UBX-M8030 chipset, that can generate pulse trains synchronized with GPS or UTC time grid with intervals configurable over a wide frequency range. It may be used as a low frequency time synchronization pulse or as a high frequency reference signal.
- The **ANT_ON** line, consisting in the LNA or active antenna power control output (PIO16) of the internal u-blox UBX-M8030 chipset, that can provide optional control for switching off power to an external active GNSS antenna or an external separate LNA. This facility is provided to help minimize power consumption in power save mode operation.

Indicative **VCC** current consumption data for the SARA-R422M8S module with GNSS system in specific operating modes are available in the u-blox SARA-R4 series data sheet [2].

As long as the GNSS system is in operation, the module does not enter the ultra-low power deep sleep mode, even if the LTE modem is in PSM or in eDRX.

Once the <mode> parameter of the +UGPS AT command is set to 0 by the external application host processor, the whole internal GNSS system is being switched off as controlled by the cellular system, and all the relevant GNSS data as position, almanac, and ephemeris, are being saved in the flash memory that is part of the cellular system. Then, the module can enter the ultra-low power deep sleep mode when the LTE modem is in PSM or in eDRX mode. In this condition, or when the module is switched off, only the RTC block of the cellular system is operational, keeping the reference time updated with negligible current consumption while feeding power through the **VCC** main supply input of the SARA-R422M8S module.

Upon module wake-up from the ultra-low power deep sleep mode, or upon module switch-on, once the <mode> parameter of the +UGPS AT command is set again to 1 by the external application processor, all the relevant GNSS data are fetched again by the cellular chipset, and they are provided to the GNSS system with up-to-date time reference.

Therefore, feeding power through the **VCC** input of the SARA-R422M8S module when the internal GNSS subsystem is switched off, or when the whole module is in the ultra-low power deep sleep mode or switched off, may be seen as similar to supplying a voltage on the V_BCKP pin of a stand-alone GNSS receiver, considering that all the relevant GNSS data are stored in the flash memory of the module instead of be saved in the back-up RAM of the GNSS receiver, and the time reference clock is maintained by the cellular subsystem.

☞ It is recommended to provide accessible test point directly connected to the **TXD_GNSS** pin, consisting in the UART data output of the internal u-blox GNSS chipset, or to the AUX UART pins, at least on the **DCD** data output pin of the AUX UART interface, to get data form the GNSS system for GNSS diagnostic purpose.

#### 2.2.2.2 GNSS Tx data ready

Figure 4 illustrates also an internal connection implemented for current consumption optimization: a dedicated PIO of the u-blox UBX-M8 GNSS chipset is internally connected to the cellular chipset to provide the additional internal “GNSS Tx data ready” functionality, which can be enabled by using the +UGPRF AT command. See section 4.1.2.1 for an AT commands procedure example.

This feature allows an optimization of the power consumption of the module: once the power saving configuration is enabled by the +UPSV AT command, the cellular system enters low power idle mode whenever possible, and the GNSS system can wake up the cellular system only when is ready to send GNSS data over the I2C interface.

#### 2.2.2.3 Timing functionalities

As illustrated in Figure 4, the **TIMEPULSE** line, i.e., the time pulse output of the internal GNSS chipset, is available on the SARA-R422M8S modules. The line can provide pulse trains synchronized with GPS or UTC time grid with intervals configurable over a wide frequency range. It may be used as a low frequency time synchronization pulse or as a high frequency reference signal.

### 2.2.3 SARA-R422M10S modules

#### 2.2.3.1 Overview

☞ The communication with an external u-blox GNSS system is not supported by SARA-R422M10S modules with integrated GNSS system based on the u-blox UBX-M10050 chipset.

Figure 5 illustrates the main internal architecture elements of the GNSS system integrated in the SARA-R422M10S modules, based on the u-blox UBX-M10050 chipset with ROM SPG 5.10 version, also including a dedicated surface acoustic wave (SAW) filter and a low noise amplifier (LNA) to improve GNSS performance and jamming immunity against strong out-of-band jammers close to the GNSS antenna, such as the cellular antenna.

The cellular system processor is internally connected with the GNSS system by the dedicated 1.8 V I2C-bus compatible interface, acting as communication interface between the two systems, while the external application host processor can communicate with the cellular and the GNSS systems over the available UART interfaces as also illustrated in Figure 1.

Since the cellular and the GNSS systems do not share the same RF path, the SARA-R422M10S modules guarantee cellular and GNSS concurrent operations. No time-sharing is required for GNSS and cellular operations: the GNSS system operates independently, and it is possible to obtain the GNSS position while cellular transmission / reception operations are in progress.

Additionally, the GNSS system can be accessed through the cellular chipset also while the cellular modem is in the power saving configuration enabled by the `+UPSV` AT command, in the eDRX mode enabled by the `+CEDRXS` AT command, in the airplane mode enabled by the `+CFUN` AT command, or in the Power Saving Mode (PSM) mode enabled by the `+CPSMS` AT command (for further details on these AT commands, see the u-blox SARA-R4 series AT commands manual [4]).

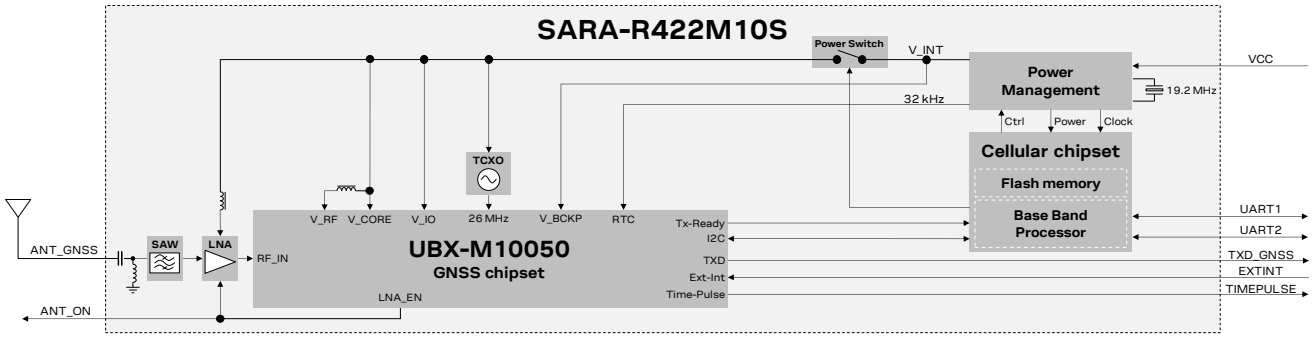


**Figure 5: SARA-R422M10S modules GNSS section block diagram**

SARA-R422M10S modules, as Cellular + GNSS combo, represent a cost-effective and size-optimized solution, compared with a standalone GNSS + standalone Cellular system. Beside integrating the u-blox UBX-M10050 chipset, dedicated TCXO, SAW filter, LNA and related matching components passive parts, the SARA-R422M10S modules also include the Power Management and the flash memory that are part of the cellular system but used for the GNSS system too, allowing reduced parts count and compact PCB area.

The internal GNSS subsystem is by default not powered at the boot of the SARA-R422M10S module, except for the GNSS backup power supply domain that is fed as well as the GNSS RTC clock as long as the **V_INT** supply is generated by the cellular power management, adding hot start capability as long as the module does not enter deep-sleep mode or does not switch off.

Once the `<mode>` parameter of the `+UGPS` AT command is set to 1 by the external application host processor, the cellular processor makes available the 1.8 V supply voltage for the GNSS system using as source the **V_INT** supply generated by the cellular power management, switching on the GNSS system, and then the cellular processor can make available to the GNSS system all the relevant GNSS data as up-to-date time reference, the position, almanac and ephemeris data, which are saved in the related flash memory that is part of the cellular system (see section 3.3).

Once the GNSS system is operative, the u-blox UBX-M10050 GNSS chipset is responsible for enabling the internal LNA as required, acquiring, decoding, and processing concurrent GNSS satellite signals, and sending the related GNSS data to the cellular system processor.

Note that, due to the internal hardware architecture of the SARA-R422M10S module illustrated in Figure 5, only a subset of UBX protocol messages supported by the u-blox UBX-M10050 GNSS chipset are suitable for the implemented hardware architecture.

Considering there is no flash memory directly connected to the internal u-blox UBX-M10050 GNSS chipset, the CFG-RINV configuration items for Remote Inventory, the UBX-LOG messages for Data Logging, and the UBX-UPD messages for Firmware Update are not suitable for the implemented hardware architecture, as indicated in Table 7.

| UBX Class Id | UBX Message Id | Description |
|---|---|---|
| UBX-CFG (0x06) | CFG-VALSET/VALGET (0x8a/0x8b): CFG-RINV configuration items | Contents of Remote Inventory |
| UBX-LOG (0x21) | All messages | Logging Messages |
| UBX-UPD (0x09) | All messages | Firmware Update Messages |

**Table 7: UBX messages not supported by the SARA-R422M10S module**

Different from the SARA-R422M8S modules, the RTC of the u-blox UBX-M10050 chipset is fed by a 32 kHz clock generated by the cellular power management integrated in SARA-R422M10S modules, allowing the support of the GNSS ON/OFF power save mode (PSMOO) as well as the GNSS cyclic tracking power save mode (PSMCT) without necessity of a special procedure to activate it. The clock for the GNSS RTC is fed as long as the **V_INT** supply is generated by the cellular power management.

See section 4 for further details about the possible configurations for the internal GNSS system, and see the u-blox M10 SPG 5.10 interface description [11].

As previously mentioned, the GNSS system can be accessed through the cellular chipset also while the LTE modem is in the power saving configuration, eDRX, airplane, or PSM mode. In these cases, the current consumption of the whole module will be mainly due to specific operating mode of the GNSS system (as acquisition, continuous tracking or cyclic tracking mode), and it will be partially due to the sub-section of the cellular system keeping available the GNSS system.

As illustrated in Figure 5, the following 1.8 V peripheral input output directly connected to the internal u-blox UBX-M10050 chipset are available on the SARA-R422M10S modules:

- The **TXD_GNSS** line, consisting in the UART data output of the internal u-blox UBX-M10050 chip, allowing to get all the GNSS data directly from the GNSS system as alternative option of getting the GNSS data through the UART interfaces internally connected to the cellular processor. This facility is provided to help minimize power consumption in power save mode operation.
- The **EXTINT** line, consisting in the external interrupt of the internal u-blox UBX-M10050 chip, that can be used to control the GNSS receiver or for aiding.

- The **TIMEPULSE** line, consisting in the time pulse output of the internal u-blox UBX-M10050 chip, that can generate pulse trains synchronized with GPS or UTC time grid with intervals configurable over a wide frequency range. It may be used as a low frequency time synchronization pulse or as a high frequency reference signal.
- The **ANT_ON** line, consisting in the LNA and/or active antenna power control output of the internal u-blox UBX-M10050 chip, that can provide optional control for switching off power to an external active GNSS antenna or an external separate LNA. This facility is provided to help minimize power consumption in power save mode operation.

Indicative **VCC** current consumption data for the SARA-R422M10S module with GNSS system in specific operating modes are available in the u-blox SARA-R4 series data sheet [2].

As long as the GNSS system is in operation, the module does not enter the ultra-low power deep sleep mode, even if the LTE modem is in PSM mode or in eDRX.

Once the `<mode>` parameter of the `+UGPS` AT command is set to 0 by the external application host processor, the internal GNSS system is being switched off (V_CORE, V_RF and V_IO domains) as controlled by the cellular system, and all the relevant GNSS data as position, almanac and ephemeris, can be saved in the flash memory that is part of the cellular system, according to aiding configuration (see section 3 for further details). The GNSS backup power supply domain (V_BCKP) is kept fed as well as the GNSS RTC clock as long as the **V_INT** supply is generated by the cellular power management, implementing the GNSS hardware backup mode.

Once the GNSS hardware backup mode is in place, hot start with better TTFF, accuracy, availability, and power consumption will be available if the next startup of the internal GNSS system is executed with the **V_INT** supply still enabled by the cellular power management, and this condition is valid if the module does not enter the ultra-low power deep sleep mode with the modem in PSM or in eDRX, and if the module has not been switched off. Otherwise, the module can enter the ultra-low power deep sleep mode when the LTE modem is in PSM or in eDRX, disabling the **V_INT** supply and the GNSS hardware backup mode accordingly.

When the module is in the ultra-low power deep sleep mode, or when it is switched off, only the RTC block of the cellular system is operational, keeping the reference time updated with negligible current consumption while feeding power through the **VCC** input of the SARA-R422M10S module.

Upon module wake-up from the ultra-low power deep sleep mode, or upon module switch-on, once the `<mode>` parameter of the `+UGPS` AT command is set again to 1 by the external application processor, all the relevant GNSS data can be fetched again by the cellular chipset and they are provided to the GNSS system with up-to-date time reference, according to aiding configuration (see section 3 for further details).

Therefore, feeding power through the **VCC** input of the SARA-R422M10S module when the internal GNSS subsystem is switched off, or when the whole module is in the ultra-low power deep sleep mode or switched off, may be seen as similar of supplying a voltage on the V_BCKP pin of a stand-alone GNSS receiver, considering that all the relevant GNSS data can be stored in the flash memory of the module instead of being saved in the back-up RAM of the GNSS receiver, and the time reference clock is maintained by the cellular subsystem.

☞ It is recommended to provide accessible test point directly connected to the **TXD_GNSS** pin or to the **DCD** data output pin of the AUX UART interface, to get data form the GNSS system for GNSS diagnostic purpose.

#### 2.2.3.2 GNSS Tx data ready

Figure 5 illustrates also an internal connection implemented for current consumption optimization: a dedicated PIO of the u-blox GNSS chipset is internally connected to the cellular chipset to provide the additional internal "GNSS Tx data ready" functionality, which can be enabled by using the `+UGPRF` AT command (see section 4.1.2.1 for an AT commands procedure example).

This feature allows an optimization of the power consumption of the module: once the power saving configuration is enabled by the `+UPSV` AT command, the cellular system enters low power idle mode whenever possible, and the GNSS system can wake up the cellular system only when is ready to send GNSS data over the I2C interface.

#### 2.2.3.3 Timing functionalities

As illustrated in Figure 5, the **TIMEPULSE** line, i.e., the time pulse output of the internal GNSS chip, is available on the SARA-R422M10S modules. The line can provide pulse trains synchronized with GPS or UTC time grid with intervals configurable over a wide frequency range. It may be used as a low frequency time synchronization pulse or as a high frequency reference signal.

## 2.3 Modules without integrated GNSS chipset

### 2.3.1 SARA-R500S, SARA-R510S and SARA-R500E modules

#### 2.3.1.1 Overview

The SARA-R500S, SARA-R510S and SARA-R500E modules do not integrate the GNSS system, but the modules can be combined with an external u-blox M8 GNSS system as illustrated in Figure 6. See section A.1 for the compatibility between SARA-R500S / SARA-R510S / SARA-R500E cellular modules and u-blox GNSS receivers.

The cellular system, consisting of a SARA-R500S, a SARA-R510S or a SARA-R500E module, is connected with the external u-blox M8 GNSS system by the 1.8 V I2C interface, acting as communication interface between the two systems, while the external application host processor can communicate with the cellular and the GNSS systems over the available UART interfaces of the SARA-R500S, SARA-R510S or SARA-R500E module as also illustrated in Figure 1.

Combining SARA-R500S, SARA-R510S or SARA-R500E modules with an external u-blox M8 GNSS system, no time-sharing is required for the GNSS and the cellular operations: it is possible to obtain the GNSS position while cellular transmission / reception operations are in progress.

Additionally, the GNSS system can be accessed through the cellular chipset also while the LTE modem is in the power saving configuration enabled by the `+UPSV` AT command, in the eDRX mode enabled by the `+CEDRXS` AT command, in the airplane mode enabled by the `+CFUN` AT command, or in the PSM mode enabled by the `+CPSMS` AT command. For further details on these AT commands, see the u-blox SARA-R5 series AT commands manual [3].

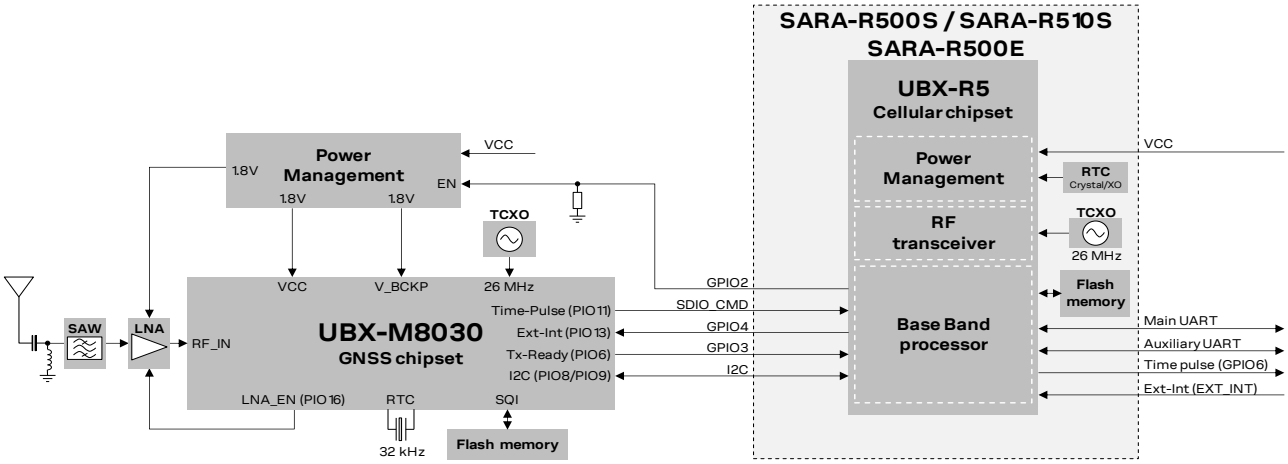


**Figure 6: Interfacing SARA-R500S / SARA-R510S / SARA-R500E modules with external u-blox 1.8 V GNSS system**

Figure 6 illustrates an example of external GNSS system based on the u-blox M8030 GNSS chipset, including optional parts, as additional LNA and SAW filter along the GNSS RF path, an additional SQI flash memory, an additional RTC crystal, which may be included in the design depending on application use-case requirements. For further description and design-in guidelines regarding the external u-blox M8 GNSS system, see the hardware integration manual of the selected u-blox M8 GNSS receiver.

The **SDA** and **SCL** pins of the SARA-R500S / SARA-R510S / SARA-R500E cellular module must be connected to the corresponding pins of the u-blox 1.8 V GNSS receiver as illustrated in Figure 6 circuit example to properly combine the cellular and GNSS systems, to take advantage of the GNSS aiding features embedded in the cellular modules. Additional external pull-up resistors are not needed on the **SDA** and **SCL** lines, because SARA-R5 modules and u-blox 1.8 V GNSS receivers have internal pull-up resistors.

If an external u-blox 3 V GNSS receiver is selected, because the I2C interface pins of the SARA-R5 modules are not tolerant up to 3 V, the connection of the **SDA** and **SCL** pins of the cellular module to the related I2C pins of the u-blox 3 V GNSS receiver must be implemented as illustrated in the example of Figure 7, using a suitable I2C-bus bidirectional voltage translator, for example the TI TCA9406, which provides also the partial power down feature so that the GNSS 3.0 V supply can be ramped up before the **V_INT** 1.8 V cellular supply. Additional external pull-up resistors are not needed on the **SDA** and **SCL** lines of the I2C bus, because SARA-R5 modules and u-blox 3 V GNSS receivers have internal pull-up resistors, and pull-up resistors are also integrated in the TCA9406 voltage translator.

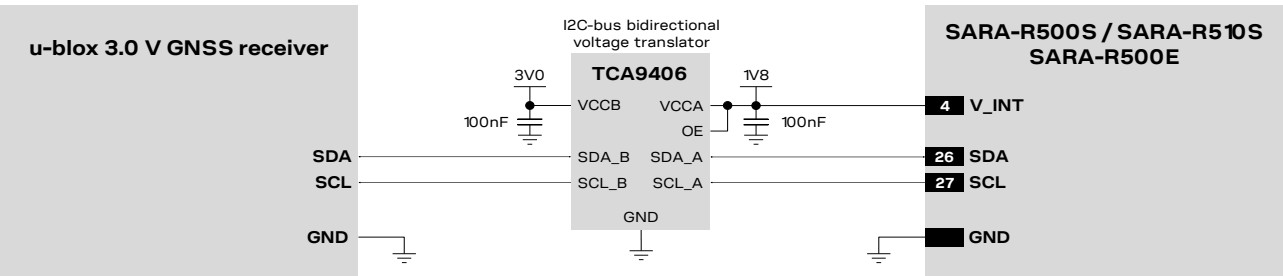


**Figure 7: I2C interfacing SARA-R500S / SARA-R510S / SARA-R500E modules to a u-blox 3.0 V GNSS receiver**

For additional guidelines regarding the design of applications with u-blox GNSS receivers, see the hardware integration manual of the selected u-blox GNSS receiver.

#### 2.3.1.2 External GNSS supply enable

Figure 6 illustrates an external connection implemented to optimize the power consumption of the external u-blox GNSS system: the **GPIO2** pin of the cellular module is connected to the active-high enable (EN) input pin of the voltage regulator that provides the voltage power supply to the external u-blox GNSS system, implementing the "External GNSS supply enable" functionality. This feature can be enabled by the `+UGPIOC` AT command, and it consists of controlling the power supply of the external u-blox GNSS system connected to the cellular module according to the status of the `<mode>` parameter of the `+UGPS` AT command. Once the "External GNSS supply enable" functionality is enabled by the `+UGPIOC` AT command, the **GPIO2** pin of the cellular module is set as:

- Output / High, to power on the external u-blox GNSS system, if the `<mode>` parameter of `+UGPS` AT command is set to 1
- Output / Low, to power off the external u-blox GNSS system, if the `<mode>` parameter of `+UGPS` AT command is set to 0

Therefore, with the "External GNSS supply enable" function, when GNSS functionality is not required, the external u-blox GNSS system can be completely powered off by AT command sent to the cellular module form the application host processor, allowing optimized power consumption of the external u-blox GNSS system.

An additional external pull-down resistor can be provided along the **GPIO2** line as illustrated in Figure 6, to avoid a switch-on of the external u-blox GNSS system when the cellular module is switched off or in deep sleep mode.

Table 8 summarizes the pins available on the SARA-R500S / SARA-R510S / SARA-R500E modules for the "External GNSS supply enable" functionality.

| Function | Description | Default GPIO | Configurable GPIOs |
|---|---|---|---|
| External GNSS supply enable | Output to enable/disable the supply of an external u-blox GNSS receiver connected to the cellular module by the I2C interface | - | GPIO2 |

**Table 8: Pins of SARA-R500S / SARA-R510S / SARA-R500E modules for external GNSS supply enable functionality**

#### 2.3.1.3 External GNSS Tx data ready

Figure 6 also illustrates an external connection implemented to optimize the power consumption of the cellular module: the PIO6 / TXD pin of the external u-blox M8 GNSS system (operating at 1.8 V voltage level) is connected to the **GPIO3** pin of the cellular module implementing the "External GNSS Tx data ready" functionality. This feature can be enabled by using the `+UGPIOC` and `+UGPRF` AT commands to activate the functionality on the **GPIO3** of the cellular module, and by using the +UGUBX AT command to activate the functionality on the PIO16 pin of the external u-blox M8 GNSS system (see section A.2 for an AT commands procedure example, and see the u-blox SARA-R5 series AT commands manual [3] for further details).

Once the low power configuration is enabled by the `+UPSV` AT command, the cellular module enters low power idle mode whenever possible, and the GNSS system can wake up the cellular system only when is ready to send GNSS data over the I2C interface, by using the "External GNSS Tx data ready" functionality, allowing an optimization in the power consumption of the cellular module.

If an external u-blox 3 V GNSS receiver is selected, considering the I2C interface pins of the SARA-R5 modules are not tolerant up to 3 V, the connection of the GPIO pins of the cellular module to the corresponding pin of the u-blox 3 V GNSS receiver must be implemented as illustrated in the example of Figure 8, using a suitable unidirectional voltage translator, as for example the TI SN74LVC1T45, which provides also the partial power down feature so that the external GNSS 3.0 V supply can be ramped up before the **V_INT** 1.8 V cellular supply.

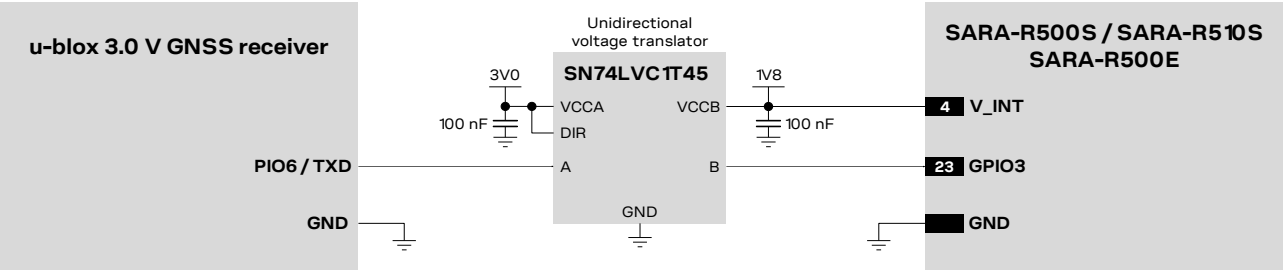


**Figure 8: GNSS Tx data ready connecting SARA-R500S / SARA-R510S / SARA-R500E to a u-blox 3.0 V GNSS receiver**

Table 9 summarizes the pins available on the SARA-R500S / SARA-R510S / SARA-R500E modules for the "External GNSS Tx data ready" functionality.

| Function | Description | Default GPIO | Configurable GPIOs |
|---|---|---|---|
| External GNSS Tx data ready | Input to sense when an external u-blox GNSS receiver connected to the module is ready for sending data over the I2C interface | - | GPIO3 |

**Table 9: Pins of SARA-R500S / SARA-R510S / SARA-R500E modules for external GNSS Tx data ready functionality**

### 2.3.1.4 Timing functionalities

Figure 9 and Figure 6 illustrate internal and external connections implemented for timings functionalities: the PIO13 (EXTINT) pin and the PIO11 (TIMEPULSE) pin of the external u-blox GNSS system based on the u-blox UBX-M8030 chipset are respectively connected to the **GPIO4** pin and **SDIO_CMD** pin of the u-blox SARA-R500S / SARA-R510S / SARA-R500E cellular module to provide GNSS timing functionalities, while the **GPIO6** pin, the **EXT_INT** pin and the UARTs AT interface pins of the u-blox SARA-R500S / SARA-R510S / SARA-R500E cellular module represent the connections available to the external application for timing functionalities.

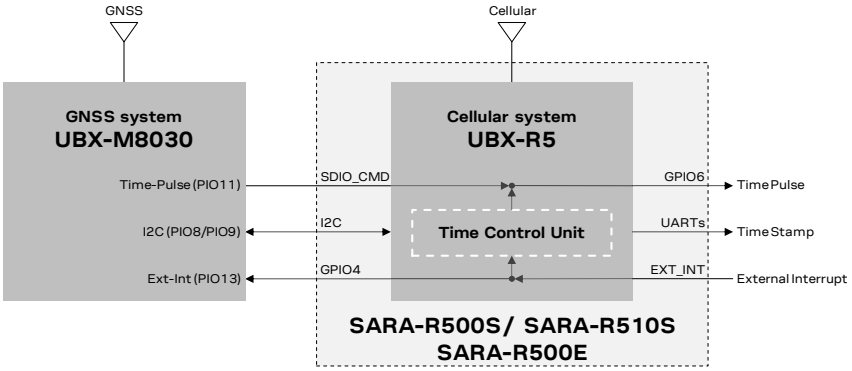


**Figure 9: SARA-R500S, SARA-R510S and SARA-R500E modules timing functionalities block diagram**

The Time Control Unit (TCU) integrated into the u-blox UBX-R5 cellular chipset is responsible for updating and distributing timing information within the module and to the AT interface. Moreover, the TCU keeps track and coordinates all the module's time sources, consisting of the GNSS system or in the LTE modem autonomous time propagation.

Timing information can be retrieved from the module by the `+UTIME` AT command in the form of:

- A time pulse
- Unsolicited result code (URC) sent over AT interface, with the corresponding time information
- An estimation of the time accuracy

For more details of the `+UTIME` AT command, see section 6.9 and the u-blox SARA-R5 series AT commands manual [3].

The **GPIO6** pin of the SARA-R500S, SARA-R510S and SARA-R500E modules can be configured to provide the "Time pulse output" functionality, consisting of a time reference available for the external application in the form of continuous PPS (pulse-per-second) output sequence, or single output pulse with time stamp sent as URC over UART AT interface containing the date and time when the pulse occurred and an estimation of the time accuracy. The time information may come from the GNSS system (using the connection from the TIMEPULSE pin of the external GNSS system to the **SDIO_CMD** pin of the cellular module illustrated in Figure 9), or from the LTE modem system. For further details, see section 6.9, and refer to the u-blox SARA-R5 series AT commands manual [3], `+UGPIOC <gpio_mode>=22`, and the `+UTIME` AT commands.

The **EXT_INT** pin of the SARA-R500S, SARA-R510S and SARA-R500E modules can be configured to provide the "Time stamp of external interrupt" functionality, consisting of timing information available for the external application in the form of an URC sent over AT interface once triggered by a rising edge applied to the **EXT_INT** input pin. When an interrupt is received by the module at the **EXT_INT** input pin, it is timestamped by the TCU using the most accurate time source available, from the GNSS system (using the connection from the **GPIO4** pin of the cellular module to the EXTINT pin of the external GNSS system illustrated in Figure 9), or from the LTE system. For further details, see section 6.9, and see the u-blox SARA-R5 series AT commands manual [3], `+UGPIOC <gpio_mode>=23`, and the `+UTIME` AT commands.

To get the timing information from the external GNSS system based on the u-blox M8030 chipset, in addition to the I2C serial interface connection between the cellular and the GNSS systems, as illustrated in Figure 9:

- the **SDIO_CMD** pin of the cellular module has to be connected to the TIMEPULSE pin of the external GNSS system and it has to be properly configured to the "External GNSS time pulse input" mode by the `+UGPIOC` AT command (`<gpio_mode>=28`) to receive the time pulse reference from the external GNSS system
- the **GPIO4** pin of the cellular module has to be connected to the EXTINT pin of the external GNSS system and it has to be properly configured to the "External GNSS time stamp of external interrupt" mode by the `+UGPIOC` AT command (`<gpio_mode>=29`) to trigger via interrupt the generation of an URC timestamp from the external GNSS system

Table 10 summarizes the pins available on the SARA-R500S, SARA-R510S and SARA-R500E modules for timing functionalities.

| Function | Description | Default GPIO | Configurable GPIOs |
|---|---|---|---|
| External GNSS time stamp of external Interrupt | Output to get an URC time stamp from an external u-blox GNSS system, triggered via interrupt | - | GPIO4 |
| Time pulse output | Output providing accurate time reference, as a time pulse sequence with 1 PPS or as a single time pulse, based on the GNSS system or on the LTE system | - | GPIO6 |
| Timestamp of external interrupt | Input triggering via interrupt the generation of an URC time stamp over AT serial interface, using the time reference from the GNSS system or the LTE system | - | EXT_INT |
| External GNSS time pulse input | Input to receive an accurate time reference, as a time pulse sequence with 1 PPS or as a single time pulse, from an external u-blox GNSS system | - | SDIO_CMD |

**Table 10: Pins of SARA-R500S, SARA-R510S and SARA-R500E modules supporting timing functionalities**

## 2.3.2 SARA-R410M, SARA-R412M and SARA-R422S modules

### 2.3.2.1 Overview

The SARA-R410M, SARA-R412M and SARA-R422S modules do not integrate the GNSS system, but the modules can be combined with an external u-blox GNSS system as illustrated in the following Figure 10 and Figure 11. See section A.1for the compatibility between SARA-R410M, SARA-R412M and SARA-R422S cellular modules and u-blox GNSS receivers.

The cellular system, consisting of a SARA-R410M, SARA-R412M or a SARA-R422S module, is connected with the external u-blox GNSS system by the 1.8 V I2C interface, acting as communication interface between the two systems, while the external application host processor can communicate with the cellular and the GNSS systems over the available UART or USB interfaces of the modules as also illustrated in Figure 1.

The external application host processor can send UBX messages to the GNSS system over the AT interface of the SARA-R410M, SARA-R412M and SARA-R422S modules, embedded in the `+UGUBX` AT command.

The external application host processor can alternatively send UBX messages to the GNSS system over the GNSS tunneling virtual channel of SARA-R422S modules, made available on the first primary UART physical interface in multiplexer mode, or over the second auxiliary UART physical interface (see the `+CMUX`, `+USIO` and `+UGPRF` AT commands in u-blox AT commands manual [4]).

The external host processor can get GNSS data, as NMEA and proprietary UBX protocol messages, over the GNSS tunneling virtual channel of SARA-R410M, SARA-R412M and SARA-R422S modules. Other options for GNSS data handling are available as illustrated in section 4.

Combining the SARA-R410M, SARA-R412M or a SARA-R422S modules with an external u-blox GNSS system, no time-sharing is required for the GNSS and the cellular operations: it is possible to obtain the GNSS position while cellular transmission / reception operations are in progress.

Additionally, the GNSS system can be accessed through the cellular modules also while the cellular modem is in the low power configuration enabled by the `+UPSV` AT command, in eDRX mode enabled by the `+CEDRXS` AT command, in the airplane mode enabled by the `+CFUN` AT command, and, in case of SARA-R422S modules, also while the cellular modem is in the power saving mode (PSM) enabled by the `+CPSMS` AT command. For more details, see the u-blox SARA-R4 series AT commands manual [4].

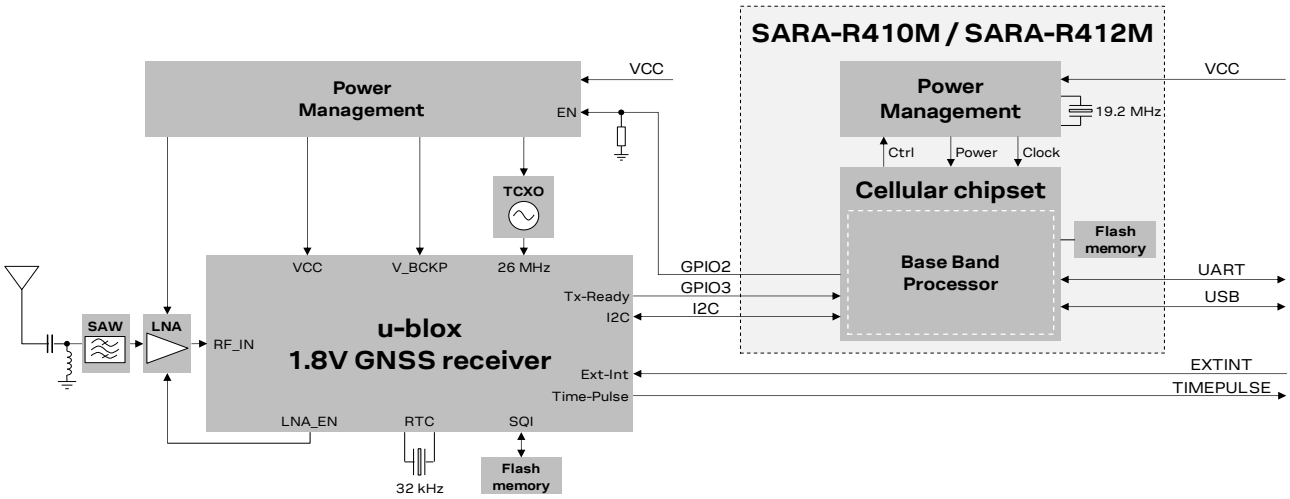


**Figure 10: Interfacing SARA-R410M / SARA-R412M modules with external u-blox 1.8 V GNSS system**

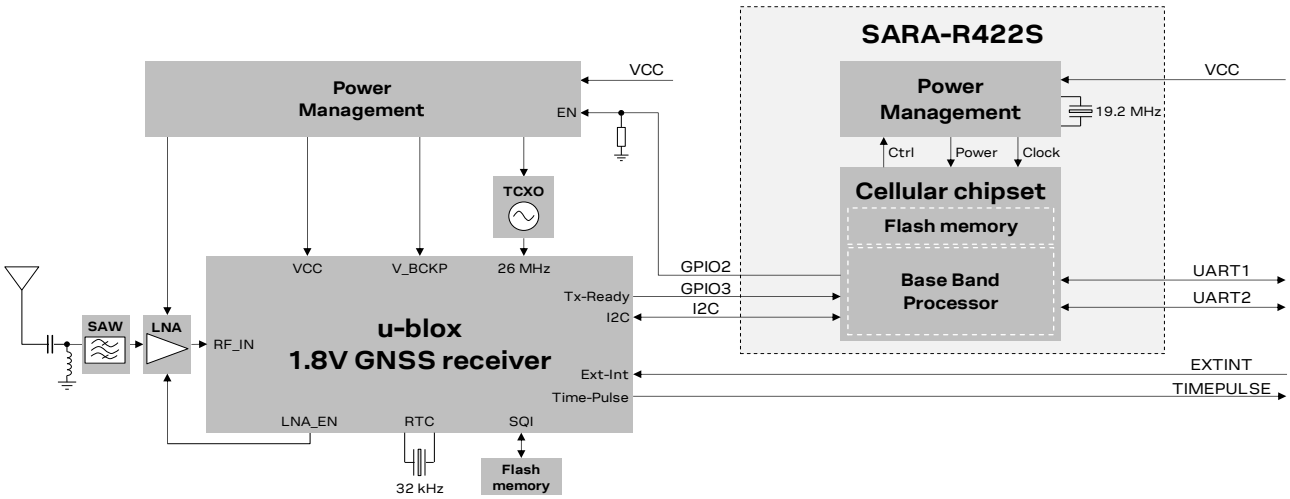


**Figure 11: Interfacing SARA-R422S modules with external u-blox 1.8 V GNSS system**

Figure 10 and Figure 11 illustrate an example of external GNSS system based on a u-blox GNSS chipset, including optional parts, as additional LNA and SAW filter along the GNSS RF path, an additional flash memory, an additional RTC crystal, which may be included in the design depending on application use-case requirements. For further description and design-in guidelines about the u-blox GNSS system, see the hardware integration manual of the selected u-blox GNSS receiver.

The **SDA** and **SCL** pins of the cellular module must be connected to the corresponding pins of the u-blox 1.8 V GNSS receiver as illustrated in the Figure 10 and Figure 11 circuit examples to properly combine the cellular and GNSS systems, to take advantage of the GNSS aiding features embedded in the cellular modules. Additional external pull-up resistors are not needed on the **SDA** and **SCL** lines, because these cellular modules and u-blox 1.8 V GNSS receivers have internal pull-up resistors.

If an external u-blox 3 V GNSS receiver is selected, considering the I2C interface pins of the cellular modules are not tolerant up to 3 V, the connection of the **SDA** and **SCL** pins of the cellular module to the related I2C pins of the u-blox 3 V GNSS receiver must be implemented as illustrated in Figure 12, using a suitable I2C-bus bidirectional voltage translator, as for example the TI TCA9406, which provides also the partial power down feature so that the GNSS 3.0 V supply can be ramped up before the **V_INT** 1.8 V cellular supply. Additional external pull-up resistors are not needed on the **SDA** and **SCL** lines of the I2C bus, because these cellular modules and u-blox 3 V GNSS receivers have internal pull-up resistors, and pull-up resistors are also integrated in the TCA9406 voltage translator.

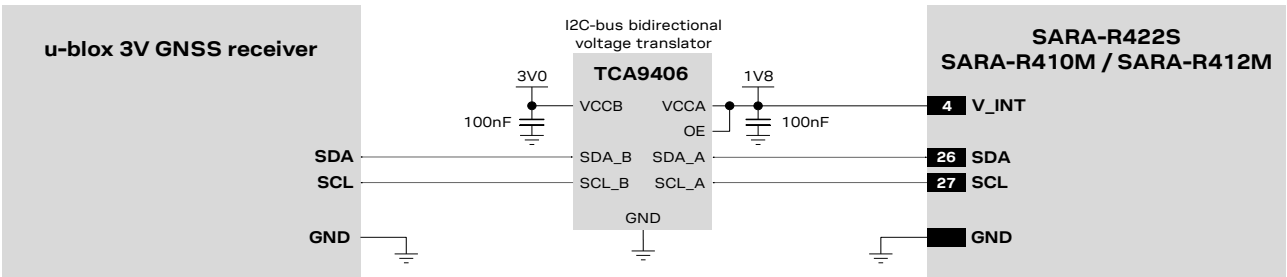


**Figure 12: I2C circuit example connecting SARA-R410M / SARA-R412M / SARA-R422S to a u-blox 3.0 V GNSS receiver**

For additional guidelines regarding the design of applications with u-blox GNSS receivers, see the hardware integration manual of the selected u-blox GNSS receiver.

#### 2.3.2.2 External GNSS supply enable

The Figure 10 and Figure 11 illustrate an external connection implemented to optimize the power consumption of the external u-blox GNSS system: the **GPIO2** pin of the cellular module is connected to the active-high enable (EN) input pin of the voltage regulator that provides the voltage power supply to the external u-blox GNSS system, implementing the "External GNSS supply enable" functionality. This feature can be enabled by the `+UGPIOC` AT command, and it consists of controlling the power supply of the external u-blox GNSS system connected to the cellular module according to the status of the `<mode>` parameter of the `+UGPS` AT command. Once the "External GNSS supply enable" functionality is enabled by the `+UGPIOC` AT command, the **GPIO2** pin of the cellular module is set as:

- Output / High, to power on the external u-blox GNSS system, if the `<mode>` parameter of `+UGPS` AT command is set to 1
- Output / Low, to power off the external u-blox GNSS system, if the `<mode>` parameter of `+UGPS` AT command is set to 0

Therefore, with the "External GNSS supply enable" function, when GNSS functionality is not required, the external u-blox GNSS system can be completely powered off by AT command sent to the cellular module form the application host processor, allowing optimized power consumption of the external u-blox GNSS system.

An additional external pull-down resistor can be provided along the **GPIO2** line as illustrated in the Figure 10 and Figure 11, to avoid a switch-on of the external u-blox GNSS system when the cellular module is switched off or in deep sleep mode.

Table 11 summarizes the pins available on the SARA-R410M / SARA-R412M / SARA-R422S modules for the "External GNSS supply enable" functionality.

| Function | Description | Default GPIO | Configurable GPIOs |
|---|---|---|---|
| External GNSS supply enable | Output to enable/disable the supply of an external u-blox GNSS receiver connected to the cellular module by the I2C interface | - | GPIO2 |

**Table 11: Pins of SARA-R410M / SARA-R412M / SARA-R422S modules for external GNSS supply enable functionality**

#### 2.3.2.3 External GNSS Tx data ready

The Figure 10 and Figure 11 illustrate also an external connection implemented to optimize the power consumption of the cellular module: the TXD pin of the external u-blox GNSS receiver (operating at 1.8 V voltage level) is connected to the **GPIO3** pin of the cellular module implementing the "External GNSS Tx data ready" functionality, which can be enabled by using the `+UGPIOC` and `+UGPRF` AT commands (see section A.2 for an AT commands procedure example, and see the AT commands manual [4] for further details).

Once the low power configuration is enabled by the +UPSV AT command, the cellular module enters low power idle mode whenever possible, and the GNSS system can wake up the cellular system only when is ready to send GNSS data over the I2C interface, by using the "External GNSS Tx data ready" functionality, allowing an optimization in the power consumption of the cellular module.

In case an external u-blox 3 V GNSS receiver is selected, considering the I2C interface pins of the SARA-R5 modules are not tolerant up to 3 V, the connection of the GPIO pins of the cellular module to the related pin of the u-blox 3 V GNSS receiver must be implemented as illustrated in Figure 13, using a suitable unidirectional voltage translator, as for example the TI SN74LVC1T45, which provides also the partial power down feature so that the external GNSS 3.0 V supply can be ramped up before the **V_INT** 1.8 V cellular supply.

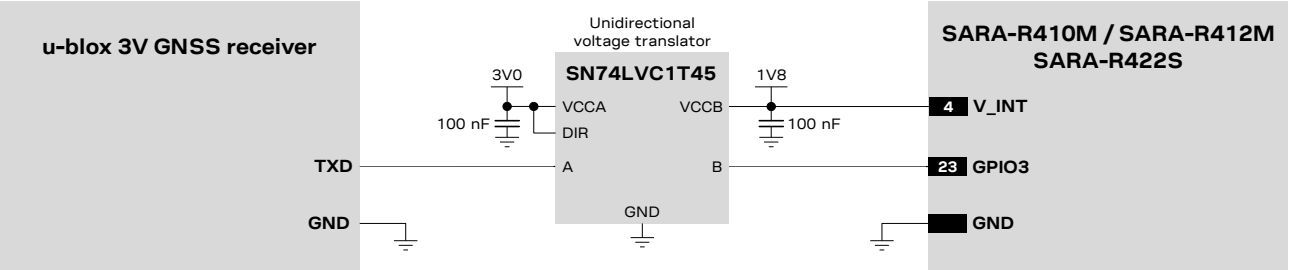


**Figure 13: GNSS Tx data ready circuit example connecting SARA-R410M /-R412M /-R422S to a u-blox 3.0 V GNSS receiver**

Table 12 summarizes the pins available on the SARA-R410M / SARA-R412M / SARA-R422S modules for the "External GNSS Tx data ready" functionality.

| Function | Description | Default GPIO | Configurable GPIOs |
|---|---|---|---|
| External GNSS Tx data ready | Input to sense when an external u-blox GNSS receiver connected to the module is ready for sending data over the I2C interface | - | GPIO3 |

**Table 12: Pins of SARA-R410M / SARA-R412M / SARA-R422S modules for external GNSS Tx data ready functionality**

### 2.3.2.4 Timing functionalities

Timing functionalities are not available on SARA-R410M / SARA-R412M / SARA-R422S modules, but they are available on the u-blox GNSS system connected to the cellular module.

## 2.4 GNSS antenna RF interface

☞ The GNSS antenna RF interface (**ANT_GNSS**) is not supported by SARA-R500S, SARA-R510S, SARA-R500E, SARA-R410M, SARA-R412M and SARA-R422S modules, as these modules do not integrate a GNSS system, but they can be combined with u-blox GNSS systems. For specific guidelines regarding the antenna RF design for u-blox GNSS receivers, see the specific hardware integration manual of the selected u-blox GNSS receiver. Guidelines for RF coexistence between the cellular and the GNSS systems included in section 2.4.4 are applicable to combining the SARA-R500S, SARA-R510S, SARA-R500E, SARA-R410M, SARA-R412M, SARA-R422S modules with u-blox GNSS systems.

### 2.4.1 Requirements and general guidelines

The SARA-R510M8S, SARA-R422M8S and SARA-R422M10S modules provide an RF interface for connecting the external GNSS antenna. The **ANT_GNSS** pin represents the RF input reception of GNSS RF signals.

The **ANT_GNSS** pin has a nominal characteristic impedance of 50 Ω and must be connected to the Rx GNSS antenna through a 50 Ω transmission line to allow proper RF reception. As shown in Figure 2, Figure 4 and Figure 5, the GNSS RF interface is designed with an internal DC block, and is suitable for both active and passive GNSS antennas due to the built-in SAW filter followed by an additional LNA in front of the integrated high performing u-blox concurrent GNSS receiver.

Table 13 summarizes the requirements for the GNSS antenna RF interface.

| Item | Requirements | Remarks |
|---|---|---|
| **Impedance** | 50 Ω nominal characteristic impedance | The impedance of the antenna RF connection must match the 50 Ω impedance of the **ANT_GNSS** port. |
| **Frequency range** | BeiDou 1561 MHz<br>GPS / SBAS / QZSS / Galileo 1575 MHz<br>GLONASS 1602 MHz | The required frequency range of the antenna connected to **ANT_GNSS** port depends on the selected GNSS constellations. |
| **Return loss** | $S_{11}$ < -10 dB (VSWR < 2:1) recommended<br>$S_{11}$ < -6 dB (VSWR < 3:1) acceptable | The return loss or the $S_{11}$, as the VSWR, refers to the amount of reflected power, measuring how well the antenna RF connection matches the 50 Ω characteristic impedance of the **ANT_GNSS** port.<br>The impedance of the antenna termination must match as much as possible the 50 Ω nominal impedance of the **ANT_GNSS** port over the operating frequency range, reducing as much as possible the amount of reflected power. |
| **Gain (passive antenna)** | > 4 dBic | The antenna gain defines how efficient the antenna is at receiving the signal. It is important providing good antenna visibility to the sky, using antennas with good radiation pattern in the sky direction, according to related antenna placement. |
| **Gain (active antenna)** | 17 dB minimum, 30 dB maximum | The antenna gain defines how efficient the antenna is at receiving the signal. It is directly related to the overall C/No. |
| **Noise figure (active antenna)** | < 2 dB | Since GNSS signals are very weak, any amount of noise degrades all the sensitivity figures of the receiver: active antennas with LNA with low noise figure are recommended. |
| **Axial ratio** | < 3 dB recommended | GNSS signals are circularly polarized. The purity of the antenna circular polarization is stated in terms of axial ratio (AR), defined as the ratio of the vertical electric field to the horizontal electric field on polarization ellipse at zenith. |

**Table 13: Summary of GNSS antenna RF interface requirements**

The antenna and its placement are critical system factors for accurate GNSS reception. Use of a ground plane will minimize the effects of ground reflections and enhance the antenna efficiency. A good allowance for ground plane size is typically in the area of 50 x 50 to 70 x 70 $mm^2$. The smaller the electrical size of the plane, the narrower the reachable bandwidth and the lower the radiation efficiency. Exercise care with rover vehicles that emit RF energy from motors etc. as interference may extend into the GNSS band and couple into the GNSS antenna suppressing the wanted signal. For more details about GNSS antennas, see also GNSS antennas application note [11].

Since SARA-R510M8S, SARA-R422M8S and SARA-R422M10S modules already include an internal SAW filter followed by an additional LNA before the u-blox GNSS chipset (as illustrated in Figure 2, Figure 4 and Figure 5), they are optimized to work with passive or active antennas without requiring additional external circuitry.

See the SARA-R5 series system integration manual [5] and the SARA-R4 series system integration manual [6] for other general guidelines for antenna interface design, including proper connection of the RF pad of the module with the application board, RF transmission line design, RF termination design.

### 2.4.2 Guidelines for applications with a passive antenna

If a GNSS passive antenna with high gain and good sky view is used, together with a short (less than 10 cm, the shorter the better) 50 Ω line between antenna and receiver, and no jamming sources affect the GNSS passive antenna, the circuit illustrated in Figure 14 can be used. This provides the minimum BoM cost and minimum board space.

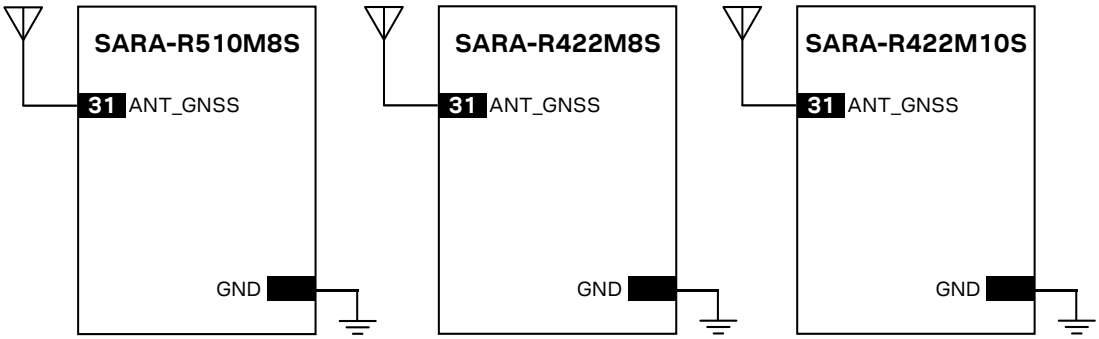


**Figure 14: Minimum circuit with GNSS passive antenna**

If the connection between the module and antenna incurs additional losses (e.g. antenna placed far away from the module, small ground plane for a patch antenna) or improved jamming immunity is needed due to strong out-of-band jammers close to the GNSS antenna (e.g. the cellular antenna is close to the GNSS antenna), consider adding an external SAW filter (see Table 14 for possible suitable examples) close to the GNSS passive antenna, followed by an external LNA (see Table 15 for possible suitable examples), as illustrated in Figure 15. Note that the SARA-R510M8S, SARA-R422M8S and SARA-R422M10S modules already include an internal SAW filter followed by an LNA before the u-blox GNSS chipset (as illustrated in Figure 2, Figure 4 and Figure 5), so that additional external SAW and LNA are not required for most of the applications (see section 2.4.4 for further details and design-in guidelines regarding cellular / GNSS RF coexistence).

☞ An external LNA with related external SAW filter are only required if the GNSS antenna is far away (more than 10 cm) from the GNSS RF input of the module. In that case, the SAW and the LNA must be placed close to the passive antenna.

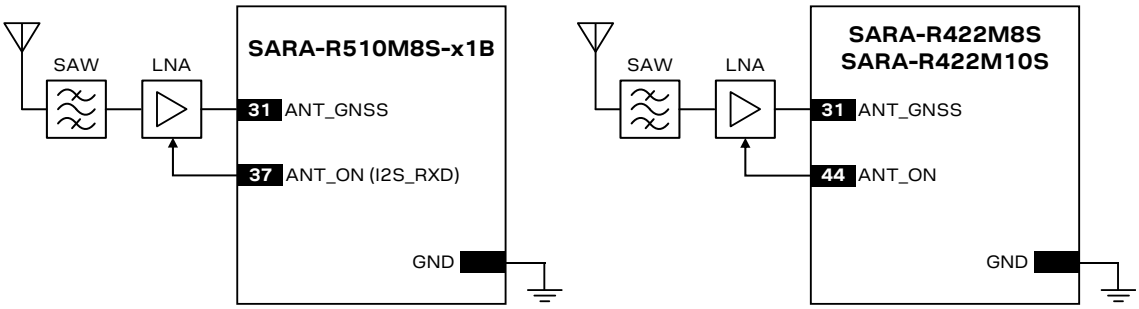


**Figure 15: Typical circuit with GNSS passive antenna placed far away from the module[1]**

The external LNA can be selected to deliver the performance needed by the application in terms of:

- Noise figure (sensitivity)
- Selectivity and linearity (robustness against jamming)
- Robustness against RF power

Depending on the characteristics of the supply source (DC/DC regulator, linear LDO regulator or other) used to supply the external LNA, make sure some good filtering is in place for the external LNA supply because of the noise on the external LNA supply line can affect the performance of the LNA itself: consider adding a proper series ferrite bead (see Table 16 for possible examples) and a decoupling capacitor to ground with self-resonant frequency in the GNSS frequency range (as for example the 27 pF 0402 capacitor Murata GCM1555C1H270JA16) at the input of the external LNA supply line.

It should be noted anyway that the insertion loss of the filter directly affects the system noise figure and hence the system performance. The selected SAW filter has to provide very low loss (no more than 1.5 dB) in the GNSS pass-band, beside providing very large attenuation (more than 40 to 60 dB) in the out-of-band jammers' cellular frequency bands (see Table 14 for possible suitable examples).

SARA-R510M8S, SARA-R422M8S and SARA-R422M10S modules already provides an integrated SAW filter and LNA (as illustrated in Figure 2, Figure 4 and Figure 5). The addition of such external components should be carefully evaluated, especially in case the application power consumption should be minimized, since the LNA alone requires an additional supply current of typically 5 to 20 mA.

Moreover, the first LNA of the input chain will dominate the receiver noise performance, therefore its noise figure should be less than 2 dB. If the antenna is close to the receiver, then a good passive antenna (see Table 17) can be directly connected to the receiver with a short (a few cm) 50 Ω line. From a noise point of view, this design choice offers comparable performance as an active antenna with a long (~3 to 5 m) cable attached to the application board by an SMA connector without the increased power consumption and BOM cost. If the goal is to protect the GNSS receiver in a noisy environment, then an additional external SAW filter may be required. If a degradation in the C/No of 2 to 3 dB (depending on the choice of the filter) is not acceptable for the application, then, to compensate for the filter losses and restore an adequate C/No level, an external LNA with good gain and low NF (see Table 15) is to be considered.

Table 14 lists examples of SAW filters suitable for the GNSS RF input of the modules.

| Manufacturer | Part number | Description |
|---|---|---|
| Murata | SAFFB1G56AC0F0A | GPS / SBAS / QZSS / GLONASS / Galileo / BeiDou RF band-pass SAW filter with high attenuation in Cellular frequency ranges |
| Murata | SAFFB1G56AC0F7F | GPS / SBAS / QZSS / GLONASS / Galileo / BeiDou RF band-pass SAW filter with high attenuation in Cellular frequency ranges |

**Table 14: Examples of GNSS band-pass SAW filters**

[1] As illustrated in Figure 2, the ANT_ON signal is not available on the SARA-R510M8S-00B product version.

Table 15 lists examples of LNA suitable for the GNSS RF input of the modules.

| Manufacturer | Part number | Comments |
|---|---|---|
| Maxim | MAX2659ELT+ | Low noise figure, up to 10 dBm RF input power |
| JRC New Japan Radio | NJG1143UA2 | Low noise figure, up to 15 dBm RF input power |
| NXP | BGU8006 | Low noise figure, very small package size (WL-CSP) |
| Infineon | BGA524N6 | Low noise figure, small package size |

**Table 15: Examples of GNSS Low Noise Amplifiers**

Table 16 lists examples of ferrite beads suitable for the supply line of an external GNSS LNA.

| Manufacturer | Part number | Comments |
|---|---|---|
| Murata | BLM15HD102SN1 | High impedance at 1.575 GHz |
| Murata | BLM15HD182SN1 | High impedance at 1.575 GHz |
| TDK | MMZ1005F121E | High impedance at 1.575 GHz |
| TDK | MMZ1005A121E | High impedance at 1.575 GHz |

**Table 16: Examples of ferrite beads for the supply line of external GNSS Low Noise Amplifiers**

Table 17 lists examples of passive antennas to be used with the modules.

| Manufacturer | Part number | Product name | Description |
|---|---|---|---|
| Tallysman | TW3400P | | Passive antenna<br>GPS / SBAS / QZSS / GLONASS |
| Tallysman | TW3710P | | Passive antenna<br>GPS / SBAS / QZSS / GLONASS / Galileo / BeiDou |
| Taoglas | CGGBP.35.3.A.02 | | Ceramic patch antenna<br>GPS / SBAS / QZSS / GLONASS / Galileo / BeiDou |
| Taoglas | CGGBP.18.4.A.02 | | Embedded patch antenna<br>GPS / SBAS / QZSS / GLONASS / Galileo / BeiDou |
| Inpaq | PA1590MF6G | | Patch antenna<br>GPS / SBAS / QZSS / GLONASS |
| Yageo | ANT2525B00BT1516S | | Ceramic patch antenna<br>GPS / SBAS / QZSS / GLONASS |
| Antenova | SR4G008 | Sinica | Ultra-low profile patch antenna<br>GPS / SBAS / QZSS / GLONASS / Galileo / BeiDou |
| Amotech | A18-4T | | Ceramic patch antenna<br>GPS / SBAS / QZSS / GLONASS / BeiDou |
| Amotech | A25-4T | | Ceramic patch antenna<br>GPS / SBAS / QZSS / BeiDou |

**Table 17: Examples of GNSS passive antennas**

### 2.4.3 Guidelines for applications with an active antenna

Active antennas offer higher gain and better overall performance compared with passive antennas (without additional external SAW filter and LNA). However, the integrated low-noise amplifier contributes an additional current of typically 5 to 20 mA to the system's power consumption budget.

Active antennas for GNSS applications are usually powered through a DC bias on the RF cable. A simple bias-T, as shown in Figure 16, can be used to add this DC current to the RF signal line. The inductance L is responsible for isolating the RF path from the DC path. It should be selected to offer high impedance (greater than 500 Ω) at L-band frequencies. A series current limiting resistor is required to prevent short circuits destroying the bias-t inductor.

To avoid damaging the bias-T series inductor in the case of a short circuit at the antenna connector, it is recommended to implement a proper over-current protection circuit. An example, based around a series resistor, is provided in Figure 16. Component values are calculated according to the characteristics of the active antenna and the related supply circuit in use: the value of $R_{bias}$ is calculated such that the maximum current capacity of the inductor L is never exceeded. Moreover, $R_{bias}$ and C form a low pass filter to remove high frequency noise from the DC supply. Assuming VCC_ANT=3.3 V, Table 18 reports suggested components for the circuit in Figure 16.

The recommended bias-t inductor (Murata LQW15ANR12J00) has a maximum current capacity of 110 mA. Hence the current is limited to 100 mA by way of a 33 Ω bias resistor. This resistor power rating must be chosen to ensure reliability in the chosen circuit design.

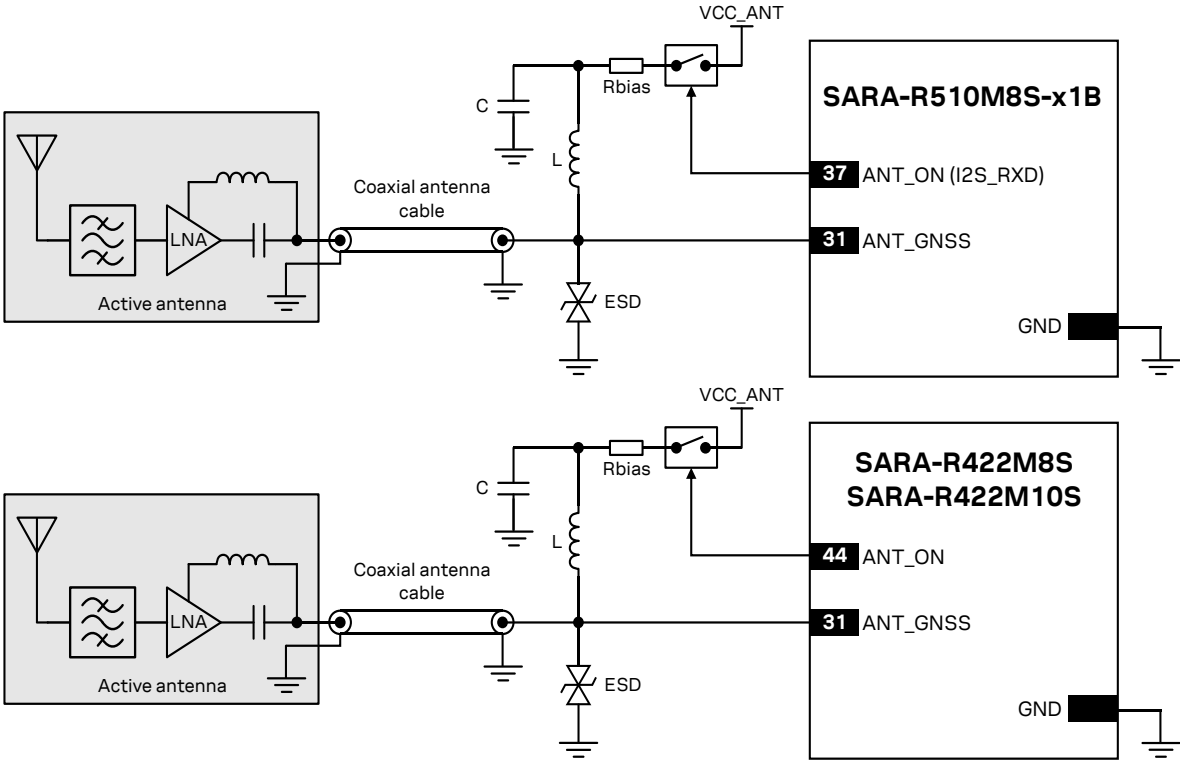


**Figure 16: Circuit example with GNSS active antenna connected to SARA-R510M8S[2] / SARA-R422M8S / SARA-R422M10S**

| Reference | Description | Part number – Manufacturer |
|---|---|---|
| L | 120 nH wire-wound RF Inductor 0402 5% 110 mA | LQW15ANR12J00 – Murata |
| C | 100 nF capacitor ceramic X7R 0402 10% 16 V | GCM155R71C104KA55 – Murata |
| Rbias | 33 ohm resistor 0.5W | Various manufacturers |

**Table 18: Example component values for active antenna biasing**

[2] As illustrated in Figure 2, the ANT_ON signal is not available on the SARA-R510M8S-00B product version.

☞ Refer to the antenna data sheet and/or manufacturer for proper values of the supply voltage VCC_ANT, inductance L and capacitance C.

☞ ESD sensitivity rating of the **ANT_GNSS** RF input pin is 1 kV (HBM according to JESD22-A114). Higher protection level can be required if the line is externally accessible on the application board. Higher protection level can be achieved by mounting an ultra-low capacitance (i.e. less than 1 pF) ESD protection (see Table 19) close to the accessible point.

Table 19 lists examples of ESD protection suitable for the GNSS RF input of the modules.

| Manufacturer | Part number | Description |
|---|---|---|
| ON Semiconductor | ESD9R3.3ST5G | ESD protection diode with ultra-low capacitance (0.5 pF) |
| Infineon | ESD5V3U1U-02LS | ESD protection diode with ultra-low capacitance (0.4 pF) |
| Littelfuse | PESD0402-140 | ESD protection diode with ultra-low capacitance (0.25 pF) |

**Table 19: Examples of ultra-low capacitance ESD protections**

Table 20 lists examples of active antennas to be used with the modules.

| Manufacturer | Part number | Product name | Description |
|---|---|---|---|
| Tallysman | TW3400 – TW3402 | | Active antenna, 2.5 – 16 V<br>GPS / SBAS / QZSS / GLONASS |
| Tallysman | TW3710 – TW3712 | | Active antenna, 2.5 – 16 V<br>GPS / SBAS / QZSS / GLONASS / Galileo / BeiDou |
| Taoglas | AA.162.301111 | Ulysses | Ultra-Low profile miniature antenna, 1.8 – 5.5V<br>GPS / SBAS / QZSS / GLONASS / Galileo |
| Taoglas | MA310.A.LB.001 | | Magnet mount antenna, 1.8 – 5.5 V<br>GPS / SBAS / QZSS / GLONASS |
| Taoglas | ASGGB254.A – ASGGB184.A | | Active GNSS surface-mount patch antenna, 1.8 – 5.5 V<br>GPS / SBAS / QZSS / GLONASS / BeiDou / Galileo |
| Taoglas | AGGBP.SL.25° – AGGBP.SL.18° | | Active GNSS surface-mount patch antenna, 1.8 – 5.5 V<br>GPS / SBAS / QZSS / GLONASS / BeiDou / Galileo |
| Abracon LLC | APAMP-110 | | Module RF antenna 5dBic SMA adhesive, 2.5 – 3.5 V<br>GPS / SBAS / QZSS |
| TE Connectivity | 2195768-1 | | Active antenna, 3.0 V typical<br>GPS / SBAS / QZSS |
| Amotech | AGA151502-S0 | | Active antenna, 3.0 V typical<br>GPS / SBAS / QZSS / GLONASS |
| Amotech | AGA393914-S0-A6 | | Active antenna, IP66, 5V typical<br>GPS / SBAS / QZSS / GLONASS / BeiDou |

**Table 20: Examples of GNSS active antennas**

### 2.4.4 Cellular and GNSS RF coexistence

Desensitization or receiver blocking is a form of electromagnetic interference where a radio receiver is unable to detect a weak signal that it might otherwise be able to receive when there is no interference (see Figure 17). Good blocking performance is particularly important in the scenarios where several radios of various forms are used in close proximity to each other.

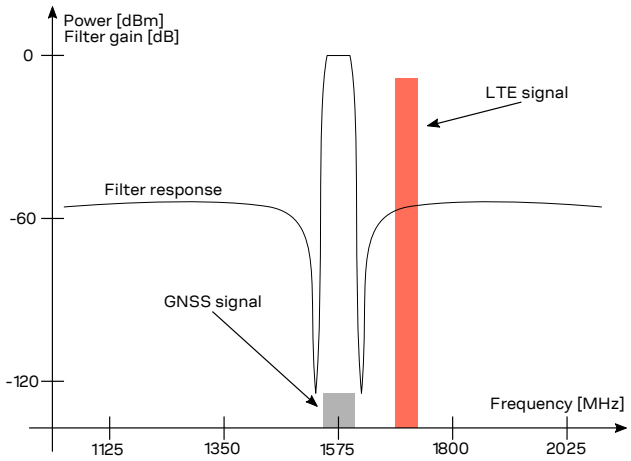


**Figure 17: Interference due to transmission in LTE B3, B4 and B66 low channels (1710 MHz) adjacent to GNSS frequency range (1561 to 1605 MHz). Harmonics due to transmission in LTE B13 high channels (787 MHz) may fall into the GNSS bands**

Jamming signals may come from in-band and out-of-band frequency sources. In-band jamming is caused by signals with frequencies falling within the GNSS frequency range, while out-of-band jamming is caused by very strong signals with frequencies adjacent to the GNSS frequency range so that part of the strong signal power may leak at the input of the GNSS receiver and block GNSS reception.

If not properly taken into consideration, in-band and out-of-band jamming signals may cause a reduction in the carrier-to-noise power density ratio (C/No) of the GNSS satellites.

In-band interference signals are typically caused by harmonics from displays, switching converters, micro-controllers and bus systems. Moreover, considering for example the LTE Band 13 high channel transmission frequency (787 MHz) and the GPS operating band (1575.42 MHz ± 1.023 MHz), the second harmonic of the cellular signal is exactly within the GPS operating band. Therefore, depending on the board layout and the transmit power, the highest channel of LTE Band 13 is the channel that has the greatest impact on the C/No reduction.

Countermeasures against in-band interference include:

- Maintaining a good grounding concept in the design
- Ensuring proper shielding of the different RF paths
- Ensuring proper impedance matching of RF traces
- Placing the GNSS antenna away from noise sources
- Adding a notch filter along the GNSS RF path, in front of SAW filter, at the frequency of the jammer (for example, as depicted in Figure 18, a simple notch filter can be realized by the series connection of a discrete capacitor and inductor)

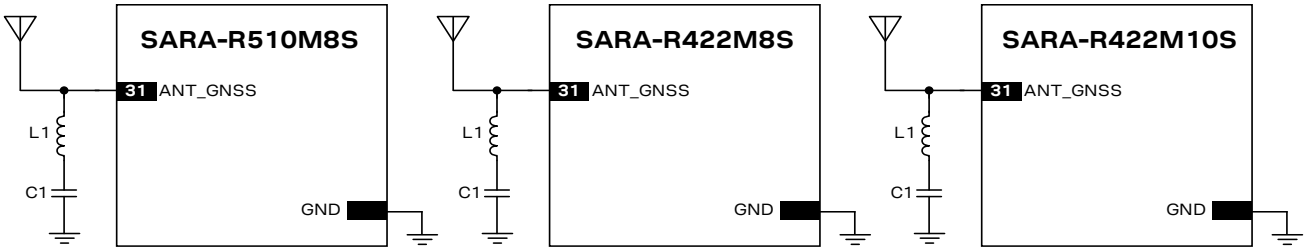


**Figure 18: Simple notch filter for improved out-of-band jamming immunity against a single jamming frequency**

With reference to Figure 18, a simple notch filter can be realized by the series connection of an inductor and capacitor. Capacitor C1 and inductor L1 values are calculated according to the formula:

$$f = \frac{1}{2\,\pi\,\sqrt{C \cdot L}}$$

For example, a notch filter at ~787 MHz improves the GNSS immunity to LTE band 13 high channel. The resulting component values (rounded to the nearest EIA component values) are: C1 = 3.3 pF, L1 = 12 nH. C1 and L1 should have tolerance less than or equal to 2 % to ensure adequate notch frequency accuracy.

On the other hand, out-of-band interference is caused by signal frequencies that are different from the GNSS, the main sources being cellular, Wi-Fi, bluetooth transmitters, etc. For example, the lowest channels in LTE band 3, 4 and 66 can compromise the good reception of the GLONASS satellites. Again, the effect can be explained by comparing the LTE frequencies (low channels transmission frequency is 1710 MHz) with the GLONASS operating band (1602 MHz ± 8 MHz). In this case the LTE signal is outside the useful GNSS band, but, provided that the power received by the GNSS subsystem at 1710 MHz is high enough, blocking and leakage effects may appear reducing once again the C/No.

Countermeasures against out-of-band interference include:

- Maintaining a good grounding concept in the design
- Keeping the GNSS and cellular antennas more than the quarter-wavelength (of the minimum Tx frequency) away from each other. If, for layout or size reasons, this requirement cannot be met, then antennas should be placed orthogonally to each other and/or on different sides of the PCB.
- Selecting a cellular antenna providing the worst possible return loss / VSWR / efficiency figure in the GNSS frequency band: the lower is the cellular antenna efficiency between 1575 MHz and 1610 MHz, the higher is the isolation between the cellular and the GNSS systems
- Ensuring at least 15 – 20 dB isolation between antennas in the GNSS band by implementing the most suitable placement for the antennas, considering in particular the related radiation diagrams of the antennas: better isolation results from antenna patterns with radiation lobes in different directions considering the GNSS frequency band.
- Adding a GNSS pass-band SAW filter along the GNSS RF line, providing very large attenuation in the cellular frequency bands (see Table 21 for possible suitable examples). It has to be noted that, as shown in Figure 2, a SAW filter and an LNA are already integrated in the GNSS RF path of the SARA-R510M8S / SARA-R422M8S / SARA-R422M10S: the addition of an external filter along the GNSS RF line has to be considered only if the conditions above cannot be met.

Table 21 lists examples of SAW filters suitable for the GNSS RF input of the modules.

| Manufacturer | Part number | Description |
|---|---|---|
| Murata | SAFFB1G56AC0F0A | GPS / SBAS / QZSS / GLONASS / Galileo / BeiDou RF band-pass SAW filter with high attenuation in Cellular frequency ranges |
| Murata | SAFFB1G56AC0F7F | GPS / SBAS / QZSS / GLONASS / Galileo / BeiDou RF band-pass SAW filter with high attenuation in Cellular frequency ranges |

**Table 21: Examples of GNSS band-pass SAW filters**

In case all the aforementioned countermeasures cannot be implemented, adding a GNSS stop-band SAW filter along the cellular RF line may be considered. The filter shall provide very low attenuation in the cellular frequency bands (see Table 22 for possible suitable examples). It has to be noted that the addition of an external filter along the cellular RF line has to be carefully evaluated, considering that the additional insertion loss of such filter may affect the cellular TRP and/or TIS RF figures.

Table 22 lists examples of GNSS band-stop SAW filters that may be considered for the cellular RF input/output in case enough isolation between the cellular and the GNSS RF systems cannot be provided by proper selection and placement of the antennas beside other proper RF design solutions.

| Manufacturer | Part number | Description |
|---|---|---|
| Qualcomm RF360 | B8666 | GPS / SBAS / QZSS / GLONASS / Galileo / BeiDou RF band-stop SAW filter with low attenuation in Cellular frequency ranges<br>1.7 x 1.3 mm |
| Qualcomm RF360 | B8939 | GPS / SBAS / QZSS / GLONASS / Galileo / BeiDou RF band-stop SAW filter with low attenuation in Cellular frequency ranges<br>1.5 x 1.1 mm |
| Murata | SADAC1G56AB0E0A | GNSS (L1) SAW extractor filter<br>1.5 x 1.1 mm |
| TST | TE0123A | GNSS band-stop SAW Notch Filter 1575.42MHz<br>3.0 x 3.0 mm |

**Table 22: Examples of GNSS band-stop SAW filters**

As far as Tx power is concerned, SARA-R5 / SARA-R4 series modules maximum output power during LTE transmission is 23 dBm. High-power transmission occurs very infrequently: typical output power values are in the range of -3 to 0 dBm (see the Terminal Tx Power distribution taken from operation on a live network in the GSMA official document TS.09 [7]). Therefore, depending on the application, careful PCB layout and antenna placement should be sufficient to ensure accurate GNSS reception.

For an example of vehicle tracking application in a small form factor featuring cellular and short-range connectivity alongside a multi-constellation GNSS receiver, with successful RF coexistence between the systems, refer to the u-blox B36 vehicle tracking blueprint [9]. The distance between the cellular and GNSS antennas for the u-blox B36 blueprint is annotated in Figure 19.

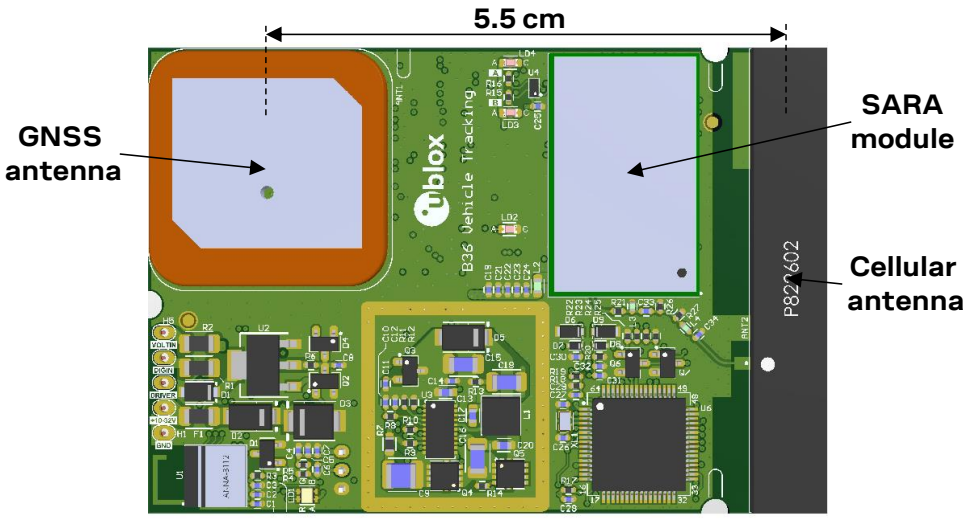


**Figure 19: PCB top rendering for the u-blox B36 blueprint with annotated distance between cellular and GNSS antennas**

# 3 Aiding features

## 3.1 Overview

GNSS receivers alone cannot always provide instant position information because it is necessary to receive signals from at least four satellites to derive their precise orbital position data, called ephemeris. Under adverse signal conditions, data download from the satellites to the receiver can take minutes, hours or even fail altogether. Assisted GNSS (A-GNSS) boosts acquisition performance by providing data such as ephemeris, almanac, accurate time and satellite status to the GNSS receiver via mobile networks or previously stored information. Aiding data enables the receiver to compute a position within seconds, even under poor signal conditions. For timings scenarios, see the u-blox receiver description document related to the u-blox GNSS receiver [10].

The basic AT command used to activate and deactivate the GNSS receiver from the cellular module is `+UGPS`. The first parameter allows switching on (`<mode>= 1`) or switching off (`<mode>= 0`).

At the GNSS receiver power-on through the +UGPS AT command the aiding mode and the GNSS system must be properly configured through the second and third parameter respectively of the same command. The GNSS aiding is a set of specific features developed by u-blox to enhance positioning performance, decreasing the TTFF and increasing the accuracy. For more details see the u-blox receiver description document corresponding to the related u-blox GNSS receiver [10] [11].

u-blox cellular modules support 4 different types of GNSS aiding:

- Local aiding
- AssistNow Offline
- AssistNow Online
- AssistNow Autonomous

The second parameter, <aid_mode>, of +UGPS AT command allows configuration of one or more assistance modes, e.g., “4” for AssistNow Online, or “0” if no aiding mode is required.

☞ Calls to the AssistNow Online/Offline services are mapped to the “AssistNow plans” and charged according to Thingstream IoT Location-as-a-Service pricing [16].

Once the GNSS receiver is powered on by the `+UGPS` AT command, aiding mode and GNSS system may be changed on a runtime basis by issuing a new `+UGPS` AT command with different aiding and/or GNSS system parameters. If a `+UGPS` AT command is issued to an already powered on GNSS device with the same aiding mode and same GNSS system as the previously selected, an error result code is returned.

For more details, see the u-blox AT commands manual [3][4], `+UGPS` AT command.

Each aiding mode is briefly described in the following sections. For additional information, see the u-blox receiver description document related to the u-blox GNSS receiver [10] [11]. Some common points:

- No aiding mode is enabled by default: when switching on the GNSS receiver, it is necessary to specify the desired aiding mode(s)
- The GNSS systems mode parameter is optional. If the connected GNSS receiver is a multi-GNSS receiver, then it is used to activate the required GNSS system, otherwise it is ignored. If the GNSS system mode is omitted for a multi-GNSS receiver, the default configuration GPS+SBAS system is activated. If a required GNSS system cannot be activated (because it is not supported) the GNSS system configuration saved in the receiver will be activated. For further details on the default GNSS system configuration for a multi-GNSS receiver, see the u-blox GNSS receiver description.

- The GNSS aiding modes can be combined to further increase performance, additional details are provided in the section 3.6
- Some assistance modes require a packet data connection to exchange information with u-blox servers
- When the GNSS receiver is switched on through the cellular module, the "OK" final result code is returned on the serial port once the communication is established. If the GNSS does not respond within 5 s, an error result code is issued: in this case check the I2C interface and the power supply pin connection
- Once the communication between cellular module and GNSS receiver is established on the I2C interface, the cellular module tries to perform the requested GNSS system activation (for a multi-GNSS receiver) and aiding type. In case of aiding failure (e.g. no network coverage, no data connectivity, expired ephemeris file etc.) the GNSS receiver operates without aiding

☞ The `+UUGIND` URC provides the aiding notification in the form `+UUGIND: <aiding_mode>,<result>`. The allowed aiding results are available in section 3.7. The feature is disabled by default and is enabled via the dedicated command `AT+UGIND=1` (for more details, see the u-blox AT commands manual [3][4]).

☞ For a multi-GNSS receiver the `+UUGIND` URC provides notification for the activated GNSS systems in the form `+UUGIND: 0,<GNSS_system>`. The feature is disabled by default.

The application should enable GNSS-related URCs. Once the application has activated GNSS-related URCs and started the GNSS with the required GNSS system and aiding mode, URCs should be monitored to verify successful completion. An example of AT command sequence is shown below:

| Command | Response | Description |
|---|---|---|
| AT+UGRMC=1 | OK | Activate storing of the last value of $RMC NMEA string. |
| AT+UGIND=1 | OK | Activate the GNSS unsolicited indication. (optional) |
| AT+UGPS=1,1,67 | OK | Power on the GNSS with GPS+SBAS+GLONASS systems and local aiding. |
| | +UUGIND: 0,67 | URC reporting GNSS system activated. |
| | +UUGIND: 1,0 | URC reporting GNSS mode "Local Aiding" ("1") and "No error" ("0"). |
| AT+UGRMC? | +UGRMC: 1,$GNRMC,,V,,,,,,,,,N *53<br>OK | Read the last stored value of the NMEA $RMC string. |
| AT+UGPS=0 | OK | Power off the GNSS. |
| | +UUGIND: 1,0 | URC reporting GNSS mode "Local Aiding" ("1") and "No error" ("0"). |

**Table 23: GNSS aiding modes AT command sequence**

## 3.2 Using GNSS without aiding support

Typically, the cellular module activates the GNSS receiver without any aiding mode. This is equivalent to switching on the positioning chip/module as a stand-alone receiver, sending commands and receiving data using the AT commands port of the cellular module. The GNSS system parameter can be optionally issued to select a specific GNSS system, otherwise GPS+SBAS system is by default selected. Table 24 shows a command sequence.

The final result code to the `AT+UGPS=1,0` command is "OK" if the GNSS receiver responds within 5 s, otherwise an error result code is issued. If the GNSS URC notification is enabled (via the `+UGIND` AT command) then the GNSS systems activated are reported by the `+UUGIND: 0,<GNSS_system>` URC.

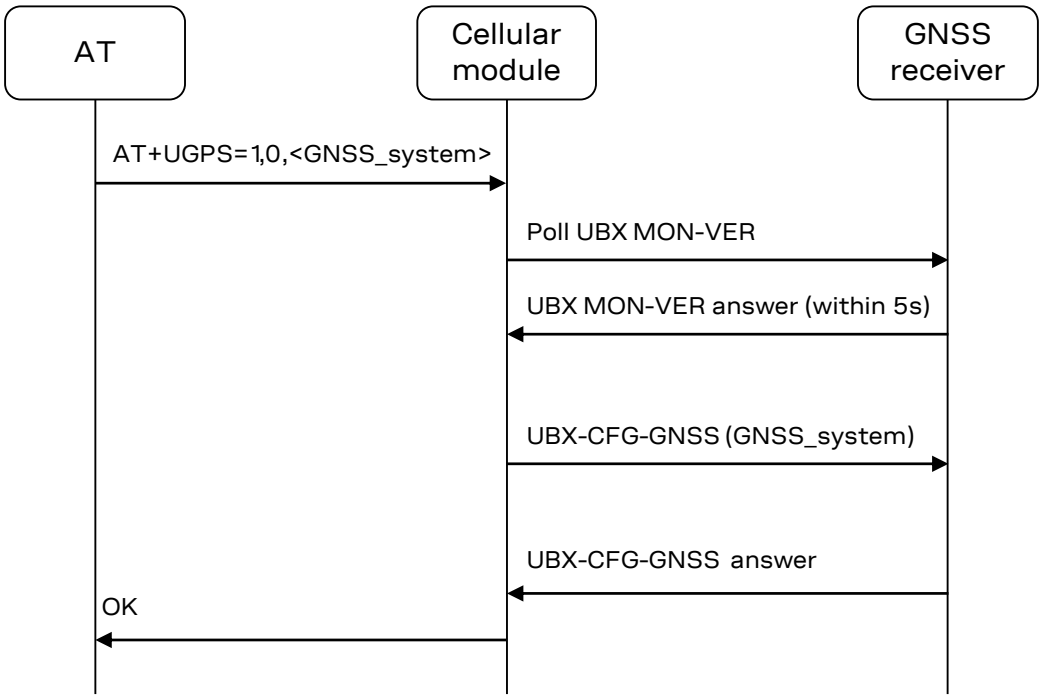


**Figure 20: Interaction between the cellular module and GNSS receiver without aiding support**

| Command | Response | Description |
|---|---|---|
| `AT+UGRMC=1` | `OK` | Enable storing of the last value NMEA $RMC string. |
| `AT+UGIND=1` | `OK` | Activate the GNSS unsolicited indication. (optional) |
| `AT+UGPS=1,0,64` | `OK` | Start up the GNSS with GLONASS only system. |
| `AT+UGPS?` | `+UGPS: 1,0,64`<br>`OK` | Read GNSS status. GNSS is powered on with GLONASS system and no active aiding. |
| | `+UUGIND: 0,64` | URC reporting GNSS system activated. |
| | | Allow the GNSS enough time to perform a fix. |
| `AT+UGRMC?` | `+UGRMC: $GLRMC,151519.00,A,4542.84409,N,01344.46705,E,0.082,,280514,,,A*60`<br>`OK` | Read the last stored value of the NMEA $RMC string. |
| `AT+UGPS=0` | `OK` | Stop the GNSS. |

**Table 24: AT command example without aiding support**

## 3.3 Using GNSS with local aiding support

When the local aiding is enabled, the cellular module automatically saves GNSS-related data (position, time, ephemerides, almanac, health and ionosphere parameters) and information about the cell on which the cellular module is camped or registered, before the GNSS shut down. No data connection over the cellular network is required for local aiding. The local aiding is activated setting the second parameter of `+UGPS` to 1 (`AT+UGPS=1,1,...`). For more details, see the AT commands manual [3][4].

The aiding data is saved in RAM at GNSS power off, and it is copied to the cellular file system during cellular module power off. At each GNSS receiver startup, the location data is uploaded from the cellular module to the GNSS receiver.

☞ The common file system space is used, but the assistance data stored in the cellular module's file system are not visible or accessible to the user.

The local aiding algorithm uses the last known position and adjusts its accuracy according to the elapsed time. However, if the Cell ID has not changed, the last known position is used with an accuracy figure of a maximum cell coverage radius (depending on the selected RAT).

If no information regarding the previous position is available, a central position of the network is used (e.g. Rome for Italian networks) with the accuracy figure reflecting the uncertainty (e.g. 700 km in the case of Italy).

The aiding data can be manually saved at any time from the GNSS to the cellular module by sending the command `AT+UGAOS=0`. This operation is automatically performed when local aiding is enabled and the GNSS is switched off with `AT+UGPS=0`.

If the local aiding is enabled and the stored aiding data is obsolete (more than 2 hours), the GNSS receiver ignores it. Just before the GNSS is switched off, the local aiding data is saved, overwriting the old data. This operation requires a few seconds.

If the GNSS has been switched on without local aiding enabled, when the GNSS is active and a fix has been calculated, the application can trigger aiding data saving by sending `AT+UGAOS=0`. Similarly, the usage of local aiding can also be forced after GNSS startup by sending `AT+UGAOS=1`. If GNSS-related URC responses are activated (by sending `AT+UGIND=1`), the command `AT+UGAOS=1` triggers a response type `+UUGIND: 1,x`, confirming that assistance data have been passed to the GNSS receiver.

The GNSS-related aiding data are saved on cellular file system in the form of UBX-MGA-INI (initial assistance data) and UBX-MGA-DBD messages (navigation database).

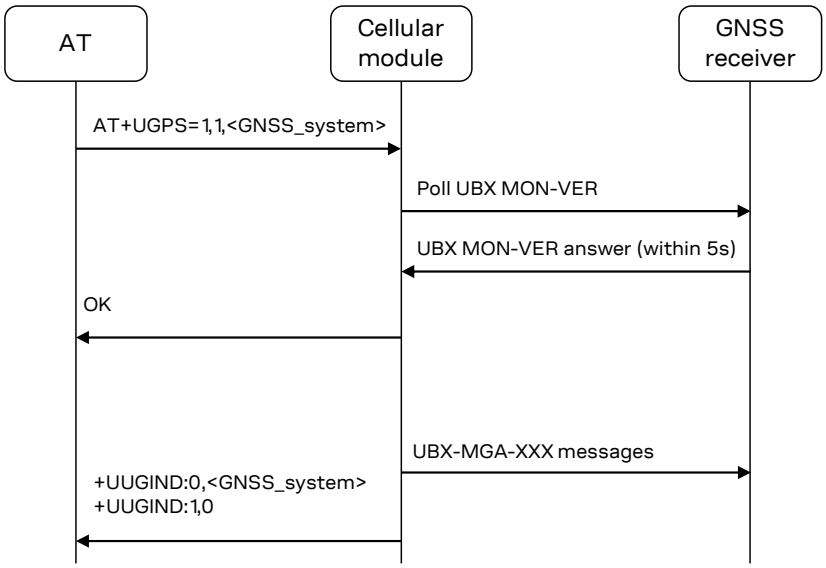


**Figure 21: Interaction between the cellular module and GNSS receiver with local aiding support**

If an error occurs, the `+UUGIND` URC will notify it; for more details, on aiding error see the section 3.7.

| Command | Response | Description |
|---|---|---|
| `AT+COPS?` | `+COPS: 0,0,"vodafone IT"`<br>`OK` | Check if the module is registered (GNSS local aiding will use cellular network information to reduce TTFF). |
| `AT+UGRMC=1` | `OK` | Activate storing of the last value of $RMC NMEA string. |
| `AT+UGIND=1` | `OK` | Activate the GNSS unsolicited indication. (optional) |
| `AT+UGPS=1,1,67` | `OK` | Start up GNSS with GPS+SBAS+GLONASS systems and local aiding (it will download assistance data to GNSS if available in FS, otherwise it will use country code information for a rough localization). |
| | `+UUGIND: 0,67` | URC reporting GNSS system activated. |
| | `+UUGIND: 1,0` | URC reporting GNSS mode “Local Aiding” (“1”) and “No error” (“0”). |
| `AT+UGRMC?` | `+UGRMC: 1,$GNRMC,083310.00,`<br>`A,4542.84584,N,01344.46445,`<br>`E,0.008,,290514,,,D*66`<br>`OK` | Wait at least 15 minutes for ephemerides download. |
| `AT+UGPS=0` | `OK` | Stop the GNSS. |
| | `+UUGIND: 1,0` | URC reporting GNSS mode “Local Aiding” (“1”) and “No error” (“0”). |

**Table 25: Local Aiding AT command sequence**

## 3.4 AssistNow aiding service

The AssistNow feature provides aiding data downloads for the connected GNSS receiver from a specific u-blox server. The cellular module contacts the server using an existing packet data connection.

AssistNow Offline downloads the aiding data from a u-blox HTTP server and saves it in the cellular file system, so that it can be transferred to the GNSS receiver at the next GNSS device power-on.

AssistNow Online downloads real-time aiding data from a u-blox HTTP server and then directly transfers the data to the powered on GNSS device.

AssistNow service provides aiding data for multi-GNSS receivers and uses a centralized server, which the cellular module contacts:

- Multi-GNSS Assistance (MGA) server access: it uses a unique HTTP server for gathering both Offline and Online assistance data. For MGA server access, configuration options from `+UGSRV` AT command are used. Configuration options in `+UGSRV` AT command includes an authentication token to authorize access to the u-blox server and for gathering anonymous statistics. For further details on how to obtain a valid token, visit the following webpage: https://thingstream.io. Configuration options in `+UGSRV` include a primary and secondary server name. The primary server name is the name of the preferred server to be contacted. If the connection with the primary server fails, the secondary server name will be used instead. The MGA service provides the access to AssistNow service for u-blox GNSS receivers. Configuration options in `+UGSRV` are saved to non-volatile memory (NVM) of the module, so they are reloaded after a cellular power cycle.

The GNSS implementation in cellular module firmware includes the MGA AssistNow server access via the authentication token defined in `+UGSRV` configuration options. The GNSS aiding data is downloaded from the MGA server.

The assistance data are downloaded from MGA server; if the authentication token is not defined, an error `+UUGIND: <aid>,16` URC code is returned if AssistNow Offline/Online aiding is requested with the `+UGPS` command.

### 3.4.1 Using GNSS with AssistNow Offline support

GNSS AssistNow Offline stores the GNSS almanac for the configured GNSS system within the cellular module's file system (FS). If there is no almanac file saved in the FS, then the cellular module will try to download it from the dedicated server using an existing packet data connection.

☞ If the assistance data needs to be downloaded, the application must activate a data connection (e.g. using `+UPSDA` AT command) to allow the cellular module to establish a connection to the server.

The configuration of AssistNow Offline can be performed through the `+UGSRV` AT command.

After the file is downloaded from the server, it is renamed with the date and time plus ".mga" extension and passed to the GNSS receiver.

AssistNow Offline configuration options are taken from `+UGSRV` AT command. Offline aiding data is requested by a HTTP request containing also the authentication token to be verified by the server. If the connected GNSS receiver is a single-GNSS, then the <days> option determines the validity period of the Differential Almanac Correction data; if the connected GNSS receiver is a multi-GNSS, then <period>, <resolution> and <GNSS_types> options determine the aiding data to be downloaded.

For more details on `+UGSRV` AT command, see the AT commands manual [3][4]. The approximate size of an AssistNow Offline aiding file for a multi-GNSS receiver is typically around 200 kB.

If the AssistNow Offline data request to the primary server fails, the cellular module retries with the secondary server. If the request to the secondary server also fails, the cellular module retries with both the primary and secondary servers after 60 seconds.

The external application processor controlling the module should verify the validity period (the detailed procedure is described below) and download new AssistNow Offline data when needed. This can be achieved by sending `AT+UGAOS=2` or simply deleting the .mga file before starting the GNSS receiver by the `+UDELFILE` AT command.

It is also possible to manually store the AssistNow Offline data file on the FS with the `+UDWNFILE` AT command. For more details on AT commands description, see the u-blox AT commands manual [3][4].

The application processor can also decide to download new AssistNow Offline data to increase performance, e.g. substitute a 14-day validity file with a new one with 1-day validity after 5 days.

☞ Time and the date within the cellular module can be set using the following AT commands: `+CCLK`, `+CTZU` and `+UGMTR`. See u-blox AT commands manual [3][4] for the commands descriptions.

☞ To automatically download a new file from the server, the following conditions need to be satisfied:

- Active packet data connection
- GNSS receiver on
- AssistNow Offline aiding enabled
- The AssistNow Offline aiding file is expired or nearing expiration (less than 10% of validity time left)

The external application processor should perform the command sequence as follows:

1. Decide a validity period of n days and store the current date somewhere (it is also possible to use the renamed file in the FS to derive the assistance file validity).
2. Use the `+UGSRV` AT command to select the period and resolution of aiding data to download
3. Start the GNSS in AssistNow Offline mode (e.g. `AT+UGPS=1,2,…` for more details, see the u-blox AT commands manual [3][4]).
4. Before each subsequent GNSS startup in AssistNow Offline mode check if the assistance data file is still valid (i.e., current_date – download_date < validity period).
5. If the file is no longer valid, delete it from the FS using the `+UDELFILE` AT command.
6. Start the GNSS in AssistNow Offline mode (`AT+UGPS=1,2….`).

| Command | Response | Description |
|---|---|---|
| `AT+UGSRV?` | `+UGSRV: "cell-live1.services.u-blox.com","cell-live2.services.u-blox.com","12345678901234567890AB",14,4,1,65,0,15`<br>`OK` | Check the AssistNow configuration for MGA access (needed only if there is no almanac file in the FS). The validity of the assistance data is given by <period> option. A valid authentication token must be supplied to correctly access the MGA server. |
| `AT+UGRMC=1` | `OK` | Activate storing of the last value of $RMC NMEA string. |
| `AT+UGIND=1` | `OK` | Activate the GNSS unsolicited indication. (optional) |
| `AT+UPSD=0,1, "web.omnitel.it"` | `OK` | Set up the connection profile with the APN specified by the network operator. |
| `AT+UPSDA=0,3` | `OK` | Activate the GPRS connection (needed only if there is no valid almanac file in the FS). |
| `AT+UGPS=1,2,67` | `OK` | Start the GNSS with GPS+SBAS+GLONASS systems and AssistNow Offline aiding. If there is no valid almanac file on the FS, it will be downloaded from the specified server). |
| | `+UUGIND: 0,67` | URC reporting GNSS system activated. |

| Command | Response | Description |
|---|---|---|
| | `+UUGIND: 2,0` | URC reporting GNSS mode “AssistNow Offline” (“2”) and “No error” (“0”). |
| | | Allow the GNSS enough time to perform a fix. |
| `AT+UGRMC?` | `+UGRMC: $GLRMC,151519.00,A,4542.84409,N,01344.46705,E,0.082,,280514,,,A*60`<br>`OK` | Read the last stored value of the NMEA $RMC string. |
| `AT+UGPS=0` | `OK` | Stop the GNSS. |

**Table 26: AssistNow Offline AT command sequence**

The `AT+UGAOS=2` command triggers the Offline aiding data file download when the GNSS receiver is switched on, but the new file will be used only when the GNSS receiver is restarted with `AT+UGPS=1,2,…`.

The longer the validity of the aiding file chosen, the larger the aiding file is. Furthermore, the size of the aiding file increases if aiding data are requested for multiple GNSS systems. If the FS is used for other applications, it is necessary to verify that there is enough space to store the assistance data. If space saving is an issue, it is recommended to use the aiding data with the shortest validity.

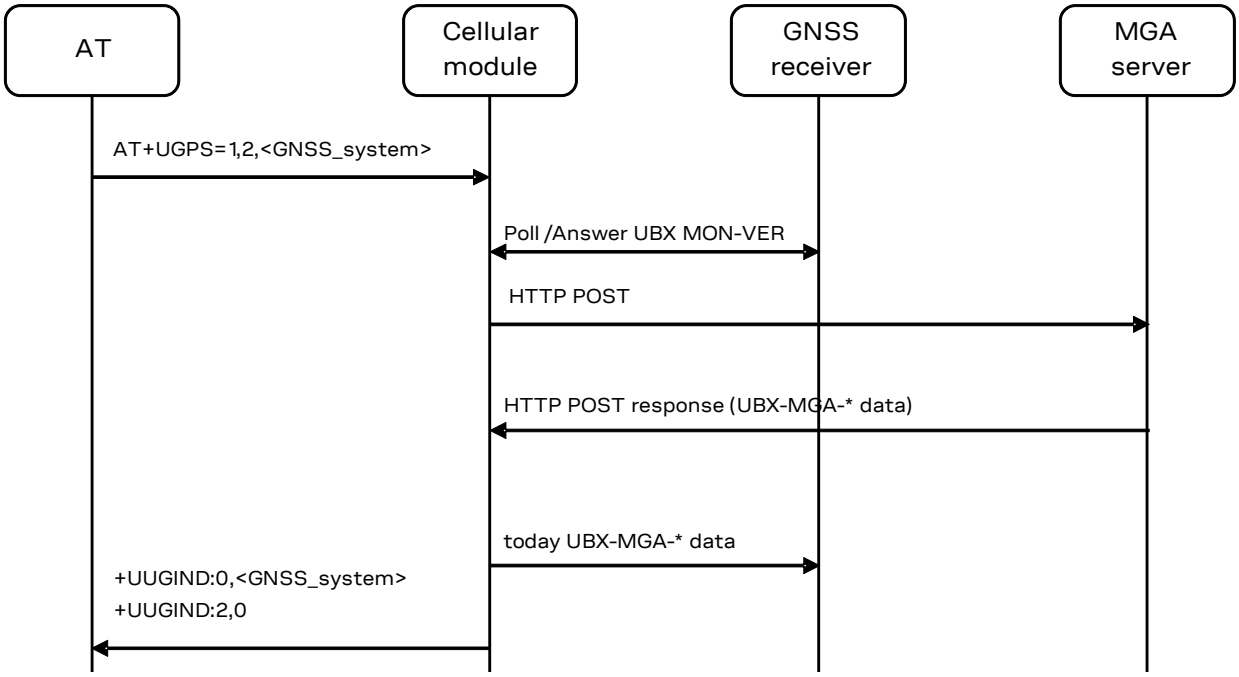


**Figure 22: Interaction between the cellular module and GNSS receiver with AssistNow Offline support**

The cellular module does not perform checks on the almanac file: it just notifies the GNSS that an mga file is available on the cellular module file system. If the file is corrupted or out of date, the GNSS determines if it will not use it, and in this case, no error notification is provided.

### 3.4.2 Using GNSS with AssistNow Online support

AssistNow Online is the assistance mode ensuring the fastest TTFF. Assistance data is downloaded from the cellular module and then passed to the GNSS receiver.

☞ An active packet data connection is required to exchange data between the cellular module and u-blox dedicated server.

At GNSS startup, a data connection is created either to the u-blox AssistNow Online server or to a configurable proxy server: for MGA server assistance, a HTTP session is created when the cell information is available. The cellular module will pass the active cell information to the server and the server will return the aiding data only for those satellites visible by the GNSS receiver at a given time.

☞ The addresses cell-live1.services.u-blox.com and cell-live2.services.u-blox.com are respectively the primary and secondary servers for the preferred MGA online server, which also supports CellLocate® requests.

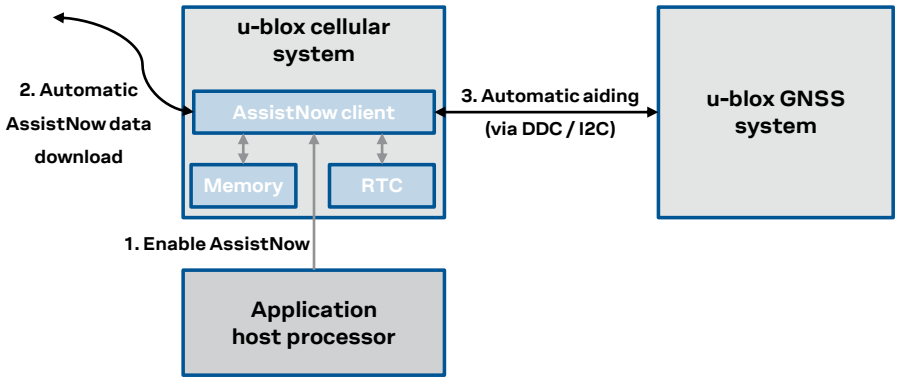


**Figure 23: AssistNow Online flow**

If no data connection is available, then the GNSS receiver will start without aiding and the URC will provide an error result code.

If the request to the primary server fails, the cellular module retries with the secondary server. If the second request also fails, there are no further attempts.

The authentication for the u-blox MGA server cell-live1.services.u-blox.com or cell-live2.services.u-blox.com is performed by the verification of the authentication token when sending the HTTP request.

After a successful access and download of assistance data, when a fix is available the cellular module provides the position information to the server for quality monitoring purposes.

If the server contacted is cell-live1.services.u-blox.com, the position information is submitted by a HTTP POST.

The data payload sent from the module to the server during the AssistNow Online procedure is about 200 bytes. Amount of aiding data downloaded from the server is variable.

| Command | Response | Description |
|---|---|---|
| AT+UGSRV? | +UGSRV: "cell-live1.services.u-blox.com","cell-live2.services.u-blox.com","12345678901234567890AB",14,4,1,65,0,15<br>OK | Check the AssistNow configuration for MGA access. A valid authentication token must be supplied to correctly access the MGA server. |

| Command | Response | Description |
|---|---|---|
| AT+UGRMC=1 | OK | Activate storing of the last value of $RMC NMEA string. |
| AT+UGIND=1 | OK | Activate the GNSS unsolicited indication. (optional) |
| AT+UPSDA=0,3 | OK | Activate the GPRS connection. |
| AT+UGPS=1,4,67 | OK | Start up the GNSS with GPS+SBAS+GLONASS systems and AssistNow Online aiding (it will send network cell information to the server and receives aiding data for the GNSS). |
| | +UUGIND: 0,67 | URC reporting GNSS system activated. |
| | +UUGIND: 4,0 | URC reporting GNSS mode “AssistNow Online” (“4”) and “No error” (“0”). |
| | | Allow the GNSS enough time to perform a fix. |
| AT+UGRMC? | +UGRMC: $GLRMC,151519.00,A,4542.84409,N,01344.46705,E,0.082,,280514,,,A*60<br>OK | Read the last stored value of the NMEA $RMC string. |
| AT+UGPS=0 | OK | Stop the GNSS. |

**Table 27: AssistNow Online AT command sequence**

The AT+UGIND=1 command enables the URCs. A URC is sent when the AssistNow Online procedure is complete, so the indication will be returned after successful delivery of the assistance data from the server, even if the receiver cannot get a GNSS fix. If an error is encountered during the AssistNow procedure, the corresponding URC will report it. For more details on the +UGIND AT command description, see the u-blox AT commands manual [3][4].

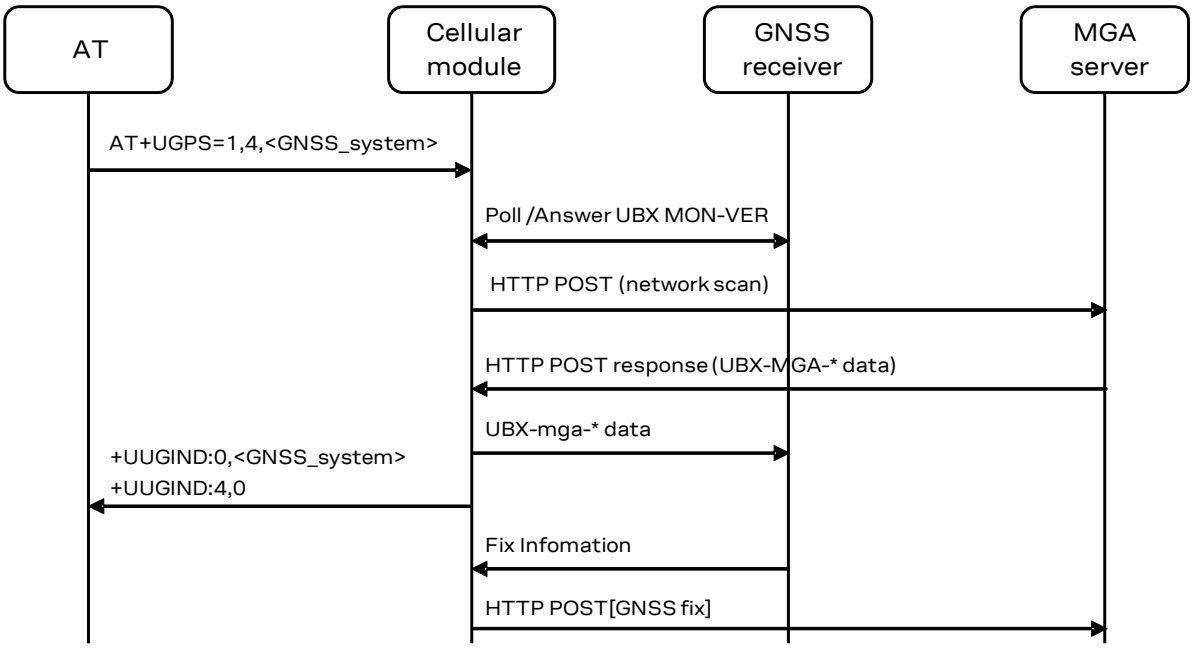


**Figure 24: Interaction between the cellular module and GNSS receiver with AssistNow Online support**

#### 3.4.2.1 Data and energy saving using AssistNow Online

It is possible to combine the desired types of online aiding by setting the `<datatype>` bitmask in the `+UGSRV` AT command. Using the "filteronpos" flag (value 16), only the ephemeris of satellites that are likely to be visible from the position estimated by the current registered network, will be sent from the server.

| Command | Remarks |
|---|---|
| `AT+UGSRV="cell-live1.services.u-blox.com","cell-live2.services.u-blox.com","1234567890123456789 0AB",14,4,1,65,0,15` | <datatype> = 15; all datatypes: position, ephemeris, almanac and auxiliary datatypes are used for online aiding |
| `AT+UGSRV="cell-live1.services.u-blox.com","cell-live2.services.u-blox.com","1234567890123456789 0AB",14,4,1,65,0,31` | <datatype> = 31; all datatypes and filteronpos are used for online aiding |

The "filteronpos" feature reduces the data to be transmitted to the cellular module and saves some energy used for data transfer.

Table 28 is a comparison of some scenarios which can be used for online aiding. The data was obtained using a SARA-R510M8S module.

| Datatype | GNSS systems | Received data (bytes) | Energy (mWh), 375 kbit/s | Energy (mWh), 50 kbit/s |
|---|---|---|---|---|
| all | GPS | 3840 | 0.09 | 0.30 |
| all+filteronpos | GPS | 2472 | 0.08 | 0.27 |
| all | GPS+Glonass+Galileo | 9124 | 0.22 | 0.60 |
| all+filteronpos | GPS+Glonass+Galileo | 6132 | 0.21 | 0.54 |

**Table 28: online aiding data comparison on SARA-R510M8S**

## 3.5 Using GNSS with AssistNow Autonomous Support

☞ For more details about the availability of AssistNow Autonomous on u-blox GNSS receiver, see section A.3.

☞ For more details about the availability of AssistNow Autonomous on u-blox cellular modules, see section 1.3.

The AssistNow Autonomous feature provides functionality similar to AssistNow without the need for a host and a connection. Based on the known ephemeris, the GNSS receiver can autonomously generate an accurate satellite orbit representation that is usable for navigation much longer than the underlying broadcast ephemeris was intended for.

The AssistNow Autonomous data is automatically and autonomously generated from downloaded (or assisted) broadcast ephemerides. Data for the full GPS constellation (32 satellites) is stored on the host file system.

AssistNow Autonomous feature may be not implemented for a specific GNSS system in a multi-GNSS receiver. If AssistNow activation fails for any reason, an error code is returned.

While AssistNow Offline data is available, the AssistNow Autonomous subsystem will not produce any data and orbits because it would be redundant information.

As with local aiding, data related to AssistNow Autonomous are saved within the cellular module FS but the file is not accessible or visible to the user.

For multi-GNSS receiver Autonomous, data is stored in the navigation database file, so the activation of AssistNow Autonomous automatically activates local aiding also.

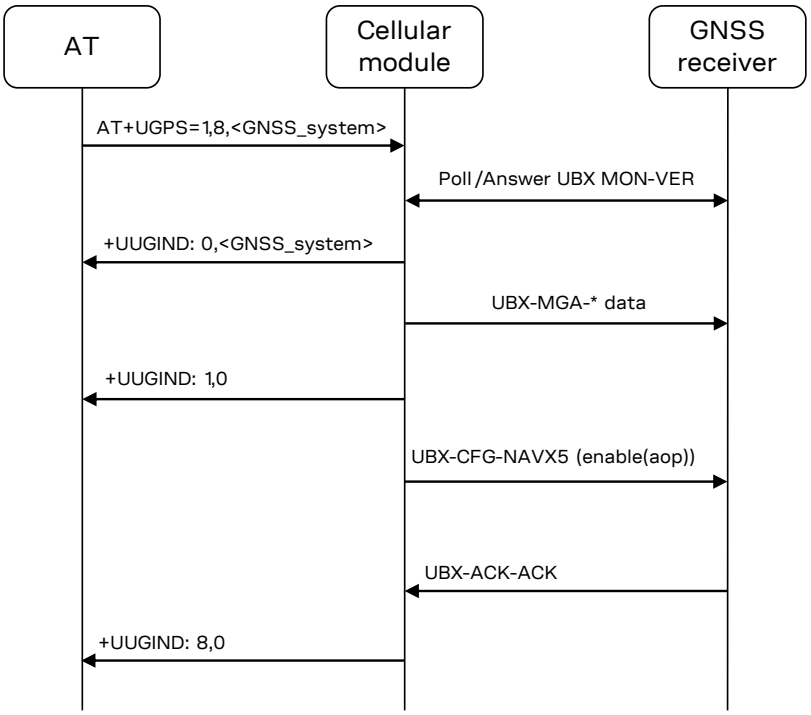


**Figure 25: Typical interaction between the cellular module and multi-GNSS receiver with AssistNow Autonomous support**

The `+UUGIND` URC is reported for each error/result.

| Command | Response | Description |
|---|---|---|
| AT+UGRMC=1 | OK | Activate storing of the last value of $RMC NMEA string. |
| AT+UGIND=1 | OK | Activate the GNSS unsolicited indication. (optional) |
| AT+UGPS=1,8,67 | OK | Startup GNSS receiver with GPS+SBAS+GLONASS systems and Autonomous aiding (it downloads data to GNSS receiver if available in the FS; otherwise it enables the AssistNow Autonomous in the GNSS receiver). |
| | +UUGIND: 0,67 | URC reporting GNSS system activated. |
| | +UUGIND: 8,0 | URC reporting GNSS mode “AssistNow Autonomous” (“8”) and “No error” (“0”). AssistNow Autonomous has been activated. |
| | | Allow the GNSS enough time to perform a fix. |
| AT+UGRMC? | +UGRMC: 1,$GNRMC,135612.00,A,4542.84609,N,01344.46417,E,0.004,,290514,,,A*65<br>OK | Read the last stored value of the NMEA $RMC string. |
| AT+UGPS=0 | | Stop the GNSS. Module automatically creates a file hidden to the user. |
| | +UUGIND: 8,0 | URC reporting GNSS mode “AssistNow Autonomous” (“8”) and “No error” (“0”). AssistNow Autonomous has been deactivated |
| | +UUGIND: 1,0 | URC reporting GNSS mode “Local Aiding” (“1”) and “No error” (“0”). |
| | OK | Answer to the AT+UGPS=0 command. |

**Table 29: AssistNow Autonomous AT command sequence**

## 3.6 Using GNSS with combined aiding modes

The GNSS aiding modes previously described can be enabled at the same time when the GNSS receiver is switched on. To enable more than one assistance mode, simply switch on the GNSS with the command AT+UGPS=1,<aid_mode>,<GNSS_systems> passing as second parameter (i.e. <aid_mode>) the algebraic sum of the codes of each assistance mode desired. For example, to activate local aiding (normally activated with AT+UGPS=1,1) and AssistNow Autonomous (AT+UGPS=1,8), simply send AT+UGPS=1,9.

If the +UUGIND URCs are enabled, there will be an unsolicited text response for each mode activated.

| Command | Response | Description |
|---|---|---|
| AT+UGRMC=1 | OK | Activate storing of the last value of $RMC NMEA string. |
| AT+UGIND=1 | OK | Activate the GNSS unsolicited indication. (optional) |
| AT+UGPS=1,9,67 | OK | Activate GNSS with GPS+SBAS+GLONASS systems and AssistNow Autonomous (AT+UGPS=1,8) and Local aiding (AT+UGPS=1,1). |
| | +UUGIND: 0,67 | URC reporting GNSS system activated. |
| | +UUGIND: 1,0 | URC reporting GNSS mode “Local Aiding” (“1”) and “No error” (“0”). Data have been passed to the GNSS. |
| | +UUGIND: 8,0 | URC reporting GNSS mode “AssistNow Autonomous” (“8”) and “No error” (“0”). AssistNow Autonomous has been activated. |
| | | Allow the GNSS enough time to perform a fix. |
| AT+UGRMC? | +UGRMC: 1,$GNRMC,135612.00,A,4542.84609,N,01344.46417,E,0.004,,290514,,,A*65<br>OK | Read the last stored value of the NMEA $RMC string. |
| AT+UGPS=0 | | Stop the GNSS. The module automatically creates files hidden to the user. |
| | +UUGIND: 1,0 | Local aiding data saved on the FS. |
| | +UUGIND: 8,0 | AssistNow Autonomous deactivated. |
| | OK | Answer to the AT+UGPS=0 command. |

**Table 30: Combined aiding modes AT command sequence**

## 3.7 Aiding result codes

The +UUGIND URC provides the aiding result; Table 31 lists the allowed aiding results:

| Aiding result | Description |
|---|---|
| 0 | No error, this message is sent when the aiding procedure is complete. With AssistNow Online the procedure is complete when the position information is sent back to the server. Local aiding and AssistNow Autonomous also perform aiding action during power off sequence, therefore they also provide URC in this phase |
| 2 | The HTTP GET request for AssistNow Offline file has failed |
| 5 | It was not possible to send AssistNow Online information to the server |
| 6 | There was an error while receiving for AssistNow Online data from the server |
| 7 | It was not possible to connect to the AssistNow Online server or to resolve its DNS |
| 8 | Error writing data in the file system |
| 9 | Generic error |
| 10 | No answer from GNSS after a data request (for local aiding and AssistNow Autonomous) |
| 11 | Data collection already in progress (for local aiding) |
| 12 | GNSS activation of AssistNow Autonomous failed |
| 14 | Feature not supported by GNSS receiver (for AssistNow Autonomous) |
| 15 | Feature partially supported (for AssistNow Autonomous) |
| 16 | Authentication token missing (required for MGA assistance server connection) |

**Table 31: GNSS aiding feature compatibility matrix**

# 4 GNSS system configuration

## 4.1 Modules with integrated GNSS chipset

### 4.1.1 General considerations

u-blox GNSS receivers come with a highly flexible communication interface supporting both NMEA and proprietary UBX protocols even on a single port. In the SARA-R510M8S, SARA-R422M8S and SARA-R422M10S modules the integrated u-blox UBX-M8030 / UBX-M10050 GNSS chipset and the u-blox cellular chipset are internally connected by I2C-bus compatible interface, and GNSS data can be redirected externally via `+UGUBX` AT command or GNSS tunneling feature.

Because of the internal hardware architecture design of the SARA-R510M8S, SARA-R422M8S and SARA-R422M10S modules, only a subset of the features set for the M8030 / M10050 GNSS chipset can be selected. For more details of each module, see Figure 2, Figure 4, and Figure 5 respectively. The related UBX messages controlling the features that are not supported with the specific implemented hardware architecture, if retrieved, may cause error responses or unpredictable behavior.

In particular, the following limitations for SARA-R510M8S, SARA-R422M8S and SARA-R422M10S modules' internal GNSS system (and relative UBX messages) shall be considered:

- The u-blox UBX-M8030 and UBX-M10050 GNSS chipsets are ROM-only based and are not connected to an SQI flash memory, so the following features shall not be used:
  - Remote Inventory (UBX-CFG-RINV messages for the UBX-M8030, UBX-CFG-VALSET/VALGET messages using UBX-CFG-RINV configuration items for the UBX-M10050)
  - Data Logging (UBX-LOG Class messages)
  - Firmware Update (UBX-UPD Class messages)
- The u-blox UBX-M8030 GNSS chipset is ROM-only based and has no backup supply, so the following feature shall not be used:
  - Permanent configuration storage (UBX-CFG-CFG/save)
- The SARA-R422M10S module supports the HW backup mode, so the permanent configuration storage (UBX-CFG-CFG/save) is available, as long as the **V_INT** supply is generated by the cellular power management.
- The u-blox UBX-M8030 GNSS chipset is not using its own RTC peripheral, so the GNSS ON/OFF power save mode (PSMOO) is not supported, while the GNSS cyclic tracking power save mode (PSMCT) is supported and a special procedure is required to activate it (see section 4.1.2 for details)
- As the RTC of the u-blox UBX-M10050 chipset is fed by a 32 kHz clock generated by the cellular power management integrated in SARA-R422M10S modules, the GNSS ON/OFF power save mode (PSMOO) is supported, as well as the GNSS cyclic tracking power save mode (PSMCT) without necessity of a special procedure to activate it.

For more information about UBX protocol messages, see the u-blox M8/M10 receiver description including protocol specification [10] [11].

☞ It is recommended to not send UBX messages to reset the GNSS receiver while it is in use, as it will cause a misalignment between the cellular system configuration and the one of the GNSS system.

☞ To avoid discrepancy and potential issues when enabling Galileo operation in the u-blox M8 chips and modules (see u-blox M8 receiver description – documentation update [17]), the following configuration shall be applied for valid tracking after enabling the GNSS receiver. In the example below, the aiding mode is set to no aiding.

| Command/Action | Response | Description |
|---|---|---|
| AT+UGPS=1,0,4 | OK | Power on the GNSS with no aiding support |
| AT+UGUBX="B56206090D0000000000FFFF000000000000011BA9" | OK | UBX-CFG-CFG to save configuration |
| <wait a minimum of 500 ms> | | |
| AT+UGUBX="B56206040400000000000E64" | OK | UBX-CFG-RST with resetMode 0x00 to issue hardware reset (watchdog) |

### 4.1.2 Power saving modes

SARA-R5 and SARA-R4 series cellular modules come in different variants and optimized to deliver the lowest achievable power consumption making it ideal for metering, smart city, connected health, security and surveillance, remote monitoring, and other battery –powered applications.

SARA-R510M8S, SARA-R422M8S, and SARA-R422M10S modules, with integrated UBX-M8030 or UBX-M10050 chip design, target mobile applications in automotive, fleet management, tracking and telematics sectors.

u-blox GNSS receivers support different power modes. These modes represent strategies of how to control the receiver to achieve either the best possible performance or good performance with reduced power consumption.

SARA-R510M8S, SARA-R422M8S, and SARA-R422M10S modules, as combined cellular and GNSS systems, can be configured with a combined set of cellular power saving configurations via dedicated AT commands (`+UPSV`, `+CPSMS`) and UBX-M8030/UBX-M10050 GNSS power saving configurations via dedicated AT commands (`+UGPRF`, `+UGUBX`) to obtain the best solution for the customer application.

Due to internal design, the UBX-M8030 included in SARA-R510M8S and SARA-R422M8S modules is not internally connected to the RTC peripheral. In the following example, UBX-CFG commands sent to the GNSS receiver instruct it to enter in cyclic tracking mode (PSMCT) with 10 s update period:

| Command | Response | Description |
|---|---|---|
| AT+UGUBX="B56206481000000000000000000020041E0000000000A0C0" | OK | Configure UBX-M8030 to ignore RTC calibration. |
| AT+UGUBX="B562063B3000020600000410420110270000102700000000000000000000000F4010000CBC0030065020000FD000000A0400000000000000589" | OK | Configure GNSS power management with PSMCT (update period = 10 s). |
| AT+UGUBX="B56206110200480162 12" | OK | Enable GNSS power save mode. |

For more information about UBX protocol messages, see the u-blox M8/M10 receiver description including protocol specification [10] [11].

For more information on AT commands supported see the u-blox AT commands manual [3][4].

Because of the internal hardware architecture of the SARA-R510M8S, SARA-R422M8S, and SARA-R422M10S modules, only a subset of UBX-M8030/UBX-M10050 power configurations can be selected to reduce the power consumption. See configurations examples in the following sections.

#### 4.1.2.1 UART power saving and GNSS Tx Data Ready with no aiding

The example below enables UART power saving and GNSS reduced I2C activity:

| Command | Response | Description |
|---|---|---|
| AT+UPSV=3 | OK | Enables UART power saving controlled by DTR line. |
| AT+CEDRXS=1,4,"0101","0011" | OK | Configures the extended discontinuous reception (eDRX). |
| AT+UGPRF=16 | OK | Configure the cellular chipset and the integrated GNSS chipset to enable TX data ready feature. |
| AT+UGRMC=1 | OK | Activate storing of the last value of $RMC NMEA string. |
| AT+UGIND=1 | OK | Activate the GNSS unsolicited indication. (optional) |
| AT+UGPS=1,0,3 | OK | Power on GNSS, no assisted GNSS requested. |
| | +UUGIND: 0,3 | URC reporting GNSS system activated. |
| **SARA-R510M8S/SARA-R422M8S:**<br>AT+UGUBX="B56206080600E8030500 01000549" | OK | Set navigation rate to 5 s (instead of default 1 s). |
| **SARA-R422M10S:**<br>AT+UGUBX="B562068A150000010000 01002130E80302002130050003002 12001809E" | OK | |

#### 4.1.2.2 UART power saving, GNSS Tx data ready and GNSS cyclic tracking mode with AssistNow online aiding

The example below combines UART power saving and GNSS cyclic tracking mode after AssistNow Online request:

| Command | Response | Description |
|---|---|---|
| AT+UPSV=3 | OK | Enables UART power saving controlled by DTR line. |
| AT+CEDRXS=1,4,"0101","0011" | OK | Configures the extended discontinuous reception (eDRX). |
| AT+UPSD=0,1,"<yourAPN>" | OK | Setup the APN. |
| AT+UGSRV="cell-live1.services.u-blox.com","cell-live2.services.u-blox.com","<yourAuthToken>" | OK | Configure AssistNow servers and authorization token for access. |
| AT+UPSDA=0,3 | OK | Activate the PDP context. |
| AT+UGPRF=16 | OK | Configure the cellular chipset and the integrated GNSS chipset to enable TX data ready feature. |
| AT+UGRMC=1 | OK | Activate storing of the last value of $RMC NMEA string. |
| AT+UGIND=1 | OK | Activate the GNSS unsolicited indication. (optional) |
| AT+UGPS=1,4,1 | OK | Power on GNSS, AssistNow online requested. |
| | +UUGIND: 0,1 | URC reporting GNSS system activated. |
| | +UUGIND: 4,0 | URC reporting GNSS mode “AssistNow Online” (“4”) and “No error” (“0”). |
| **SARA-R510M8S/SARA-R422M8S:**<br>AT+UGUBX="B56206481000000000000 000000020041E0000000000A0C0" | OK | Configure and enable GNSS cyclic tracking mode (update period = 1 s) |
| AT+UGUBX="B562063B3000020600000 4104201E8030000102700000000000 000000002C0100004FC103008602000 0FE00000064400100000000005DB2" | OK | |
| AT+UGUBX="B5620611020048016212" | OK | |
| **SARA-R422M10S:**<br>AT+UGUBX="B562068A0900000100000 100D020028DE8" | OK | |

#### 4.1.2.3 UART power saving, GNSS Tx data ready, GNSS cyclic tracking mode and GNSS UART TX output (SARA-R422M8S only)

SARA-R422M8S provides a dedicated GNSS UART TX output on pin 47 so GNSS fix messages can be monitored while the rest of cellular module is in low power mode. GNSS UART TX output is activated by default upon GNSS power-on. The following commands can be issued to enable UART power saving, reduce cellular communication with GNSS to a minimum, and set GNSS to cyclic tracking mode:

| Command | Response | Description |
|---|---|---|
| AT+UPSV=4 | OK | Enables UART power saving. |
| AT+UGPRF=16 | OK | Configure the cellular chipset and the UBX-M8030 to enable TX data ready feature. Interrupt driven communication with GNSS is used in place of polling mode. |
| AT+UGZDA=0<br>AT+UGGGA=0<br>AT+UGGLL=0<br>AT+UGGSV=0<br>AT+UGRMC=0<br>AT+UGVTG=0<br>AT+UGGSA=0 | OK<br>OK<br>OK<br>OK<br>OK<br>OK<br>OK | Disable all NMEA messages from GNSS over I2C.<br>I2C activities is reduced to minimum level. GNSS fix messages can be monitored via dedicated GNSS UART TX output on pin47. |
| AT+UGIND=1 | OK | Activate the GNSS unsolicited indication. (optional) |
| AT+UGPS=1,0,3 | OK | Power on GNSS. |
| | +UUGIND: 0,3 | URC reporting GNSS system activated. |
| AT+UGUBX="B5620648100000000000000000020041E0000000000A0C0" | OK | Configure and enable UBX-M8030 cyclic tracking mode (update period = 10 s) |
| AT+UGUBX="B562063B3000020600000410420110270000102700000000000000000F4010000CBC0030065020000FD000000A0400000000000000589" | OK | |
| AT+UGUBX="B5620611020048016212" | OK | |

#### 4.1.2.4 UART power saving, GNSS Tx data ready, GNSS cyclic tracking mode and GNSS UART TX output (SARA-R422M10S only)

SARA-R422M10S provides a dedicated GNSS UART TX output on pin 47 so GNSS fix messages can be monitored while the rest of cellular module is in low power mode. The following is an example of commands that can be issued to enable UART power saving, reduce cellular communication with GNSS to a minimum, and set GNSS to cyclic tracking mode:

| Command | Response | Description |
|---|---|---|
| AT+UPSV=4 | OK | Enable UART power saving. |
| AT+UGPRF=16 | OK | Configure the cellular chipset and the UBX-M10050 to enable TX data ready feature. Interrupt driven communication with GNSS is used in place of polling mode. |
| AT+UGZDA=0<br>AT+UGGGA=0<br>AT+UGGLL=0<br>AT+UGGSV=0<br>AT+UGRMC=0<br>AT+UGVTG=0<br>AT+UGGSA=0 | OK<br>OK<br>OK<br>OK<br>OK<br>OK<br>OK | Disable all NMEA messages from GNSS over I2C and UART. I2C activities is reduced to minimum level. |
| AT+UGIND=1 | OK | Activate the GNSS unsolicited indication. (optional) |
| AT+UGPS=1,0,3 | OK | Power on GNSS. |
| | +UUGIND: 0,3 | URC reporting GNSS system activated. |

| Command | Response | Description |
|---|---|---|
| AT+UGUBX="B562068A220000010000BB0 0912001CA00912001C000912001C50091 2001AC00912001B10091200146E7" | OK | Enable NMEA messages over GNSS UART; GNSS fix messages can be monitored via dedicated GNSS UART TX output on pin 47. |
| AT+UGUBX="B562068A150000010000010 0213010270200213001000100D0200276 3E" | OK | Configure and enable UBX-M10050 cyclic tracking mode (update period = 10 s). |

## 4.2 GNSS data communication and handling

The +UGPRF AT command configures the communication and the tunneling mode between the GNSS receiver and the cellular module. Apart from enabling "GNSS Tx data ready" function, GNSS data can be redirected from the I2C interface, connecting the GNSS system with the cellular system, in the following modes, which can be combined:

- To an auxiliary UART interface
- To a multiplexer virtual channel
- To a file in file system
- Over the air (OTA)

The configuration can be only done when the GNSS receiver is off. For more details, see the related u-blox AT commands manual [3][4], +UGPRF AT command.

| Command | Response | Description |
|---|---|---|
| AT+UGPRF=4 | OK | Enable GNSS I/O configuration on the FS. |
| AT+UPSDA=0,3 | OK | Activate the GPRS connection using the +UPSDA AT command. |
| AT+UGPS=1,0,3 | OK | Start up the GNSS receiver with GPS+SBAS system and without aiding. |
| AT+UGAOS=4 | OK | Force AssistNow Online and wait some minutes. |
| AT+UGPS=0 | OK | Stop the GNSS receiver. |
| AT+ULSTFILE= | +ULSTFILE: "GPS_20040101_001"<br>OK | Check if trace file has been generated. |

**Table 32: AT command sequence example for GNSS data redirection on File System**

| Command | Response | Description |
|---|---|---|
| AT+USIO=4 | OK | Enable AUX UART interface for GNSS tunneling.<br>The serial interfaces' configuration switch is not performed run-time. The settings are saved in NVM; the new configuration will be effective at the subsequent module reboot. |
| AT+UGPRF=1 | OK | Start the GNSS communication on the AUX UART interface. |
| AT+CFUN=16 | OK | Perform a module reboot. |
| AT+UGPS=1,0,3 | OK | Start up the GNSS receiver with GPS+SBAS system and without aiding, the GNSS output is visible on GNSS tunneling channel. |
| AT+UGAOS=0 | OK | Force local aiding data download. |
| AT+UGPS=0 | OK | Stop the GNSS receiver. |

**Table 33: AT command sequence example for GNSS data redirection on AUX UART**

The multiplexer and the AUX UART are input/output channels, while the FS and network are only output channels.

### 4.2.1 Auxiliary UART interface

The AUX UART interface can be used for GNSS tunneling, meaning that it is possible to directly communicate with the GNSS using the UBX protocol.

☞ The tunneling through AUX UART interface is mutually exclusive with the multiplexer channel.

☞ It is recommended not to send UBX messages to reset the GNSS while it is in use. This will cause a misalignment between the configurations of the cellular module and the GNSS receiver. Furthermore, it is recommended to not configure the GNSS power saving with the Tx data ready active, because the GNSS receiver could send wrong reading requests to the cellular module.

### 4.2.2 Multiplexer I/O

The cellular module FW supports the 3GPP TS 27.010 multiplexer protocol (for more details, see the 3GPP TS 27.010 specifications [14]) to emulate several virtual connection channels on a single physical interface to concurrently access the module (e.g. it is possible to read a phonebook contact while receiving GNSS data).

☞ For more details on multiplexer implementation on cellular module, see the u-blox multiplexer implementation application note [13].

☞ The 6$^{th}$ virtual channel has been dedicated to GNSS tunnel data to the host.

### 4.2.3 File System (FS) output

A single log file saved on the file system is limited to 500 kB, while the total FS usage for log files is limited to 750 kB. When the FS nears its maximum capacity, the file is closed and no other log file is created and no indication is sent. However, the string “–file truncated—" is appended to the end of the log file. If the positioning chip/module is restarted, a new file will be created if the total FS usage is not exceeded.

GNSS log files are visible within the user space and their name has the following format: `GPS_YYYYMMDDHHMM`. `YYYYMMDDHHMM` is the date and time obtained from the system. A generated log file overwrites any existing file with the same filename. This may happen if the system time has been changed or the GNSS log is started twice in the same minute.

GNSS data is stored as it is received without data compression.

### 4.2.4 Over The Air (OTA) output

The GNSS output can be redirected to a server via a data connection over TCP protocol. This communication is unidirectional, therefore not possible to send UBX commands to the positioning chip/module receiver.

# 5 Time to fix on combo products

Time to fix has been measured on a SARA-R510M8S-01B and a SARA-R422M10S-01B modules with different aiding modes: AN Online, AN Offline and local aiding. Following setup has been used:

- a GNSS simulator to simulate a real scenario with the corresponding almanac and ephemeris data, and also real AssistNow Online and Offline data corresponding to that scenario
- a cellular network simulator, always same cell used, static condition
- power saving disabled

Results reported below refer to average values measured in 100 consecutive tests.

☞ Values reported below are merely indicative as they could change basing on different scenarios and different modules configurations.

Figure 26 and Figure 27 show the different phases from power-on to fix respectively with AssistNow Offline and local aiding:

- The boot time ($t_0$) indicates the typical time taken by the module since the switch-on of the module is triggered up to readiness to reply to AT commands, which event can be monitored by enabling the greeting text, also considering the boot time may in general vary depending on the specific scenario and the concurrent activities executed by the module.
- As soon as the AT interface is ready the GNSS receiver can be powered on via `+UGPS` AT command; the `+UUGIND: 0,x` URC reports when it is ready ($t_1$).
- The time needed to transfer the aiding data to the GNSS receiver depends on information requested (for more details, see section 3); the `+UUGIND: <aid_mode>,0` URC allows to know when the aiding operation is completed successfully ($t_2$).
- The TTFF ($t_3 - t_2$) calculated by the GNSS receiver can be retrieved in the UBX-NAV-STATUS message.

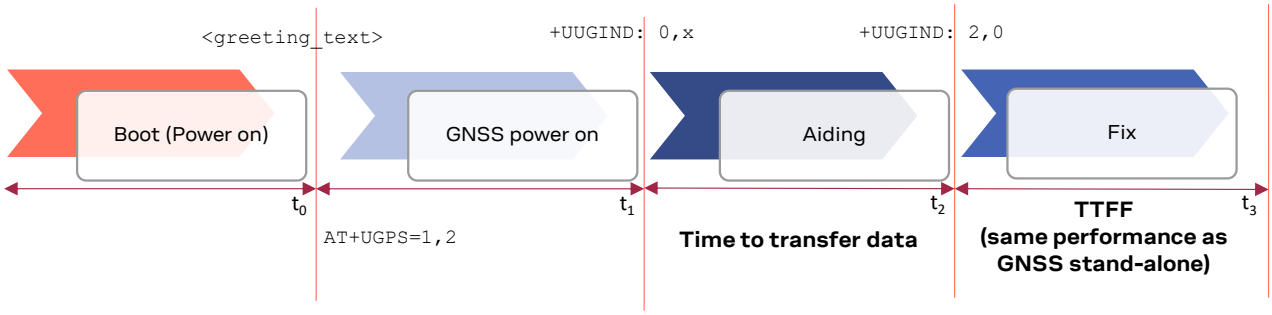


| | | | | |
|---|---|---|---|---|
| 1) | ~2 s / ~50 µWh | ~1.5 s / ~100 µWh | ~0.2 s / ~5 µWh | ~15 s / ~900 µWh |
| 2) | ~2 s / ~180 µWh | ~1.5 s / ~40 µWh | ~0.2 s / ~5 µWh | ~15 s / ~600 µWh |

**Figure 26: The different phases in 1) SARA-R510M8S-01B and 2) SARA-R422M10S-01B with AN Offline aiding**

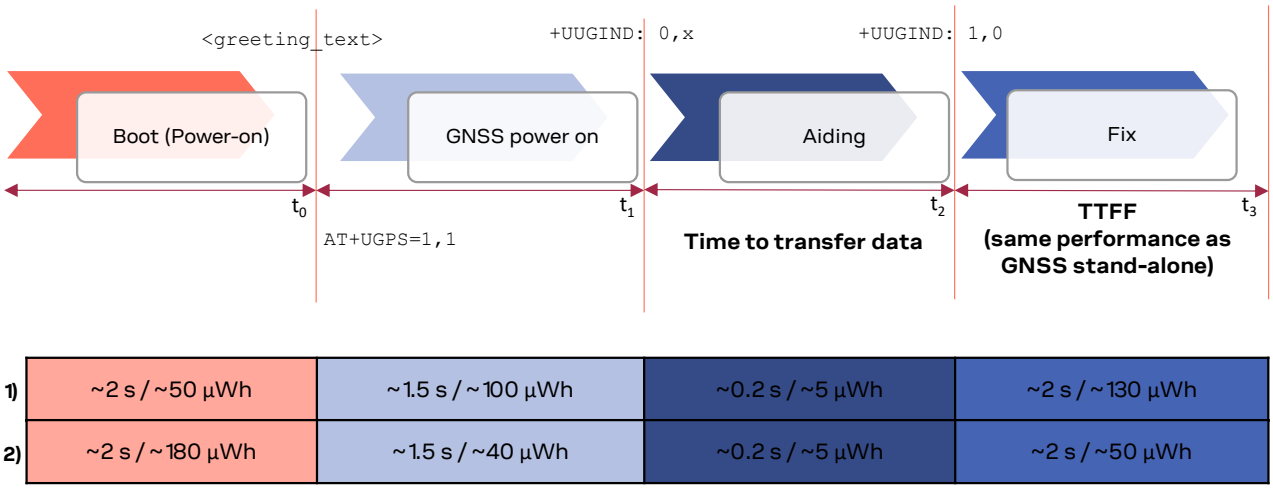


**Figure 27: The different phases in 1) SARA-R510M8S-01B and 2) SARA-R422M10S-01B with local aiding**

Figure 28 shows the different phases from power-on to fix with AssistNow Online aiding. In this case, respect to the previous ones, it is also needed to consider:

- The time needed to register on cellular network may vary, depending by the static or dynamic conditions of the module, the network cells environment, the RAT and bandmask configuration of the module. The `+CEREG URC` reports when the module is registered ($t_4$).
- The time needed to activate the PDP context may vary, depending by the RAT configuration (in case the initial default bearer is active the PDP context is already active). The `+CGEV` URC reports when the PDP context is active ($t_5$).

These two phases may take in the best case a few seconds and in the worst case up to some minutes. The GNSS receiver can also be powered on in this scenario as soon as the AT interface is ready, but in case the PDP context is not active, it will start without the online aiding support.

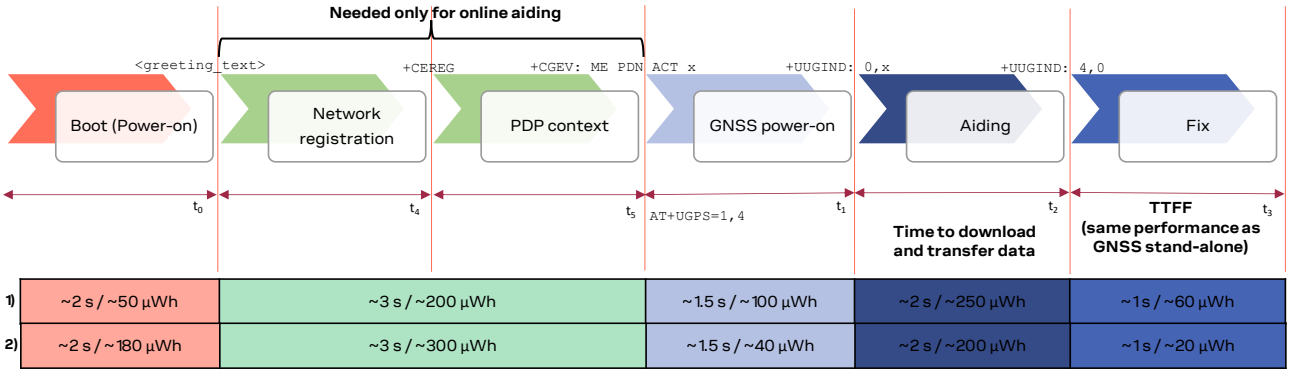


**Figure 28: The different phases in 1) SARA-R510M8S-01B and 2) SARA-R422M10S-01B with AssistNow Online aiding**

SARA-R422M10S-01B also supports hot start as long as the module does not enter deep-sleep mode or does not switch off (see 2.2.3); Figure 29 shows GNSS power-on and hot start fix phases.

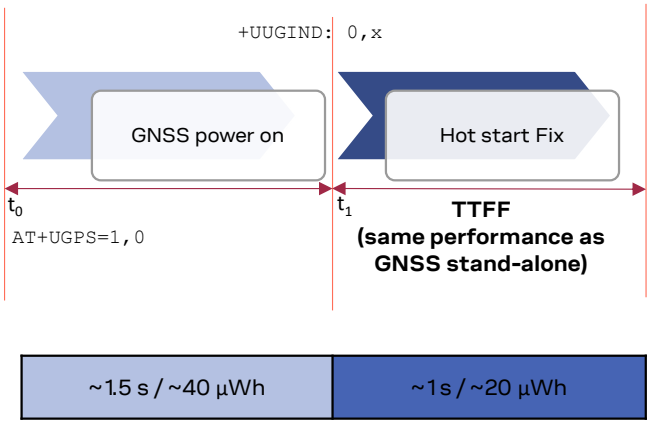


**Figure 29: The different phases in SARA-R422M10S-01B with hot start fix**

# 6 Hybrid positioning and CellLocate®

☞ Hybrid positioning and CellLocate® features are not supported by the SARA-R410M-02B-00, SARA-R410M-02B-01, SARA-R410M-02B-02, the SARA-R410M-52B-00, SARA-R410M-52B-01, SARA-R410M-52B-02, the SARA-R412M-02B-00, SARA-R412M-02B-01, SARA-R412M-02B-02.

## 6.1 Introduction

Although GNSS is a widespread technology, the reliance on the visibility of extremely weak GNSS satellite signals means positioning is not always possible, particularly in shielded environments such as indoors and enclosed park houses, or when a GNSS jamming signal is present. This situation can be improved by augmenting GNSS receiver data with mobile network cell information to provide a level of redundancy that can benefit numerous applications.

Hybrid location provides a set of features, allowing the user to query the device position using a single `+ULOC` ATcommand which triggers the position calculation based on the GNSS receiver or the position estimated from the visible cells (CellLocate®). The MGA server accessed for the position estimation is configured by `+UGSRV` AT command for multi-GNSS receiver.

Hybrid positioning is designed to provide a position estimate.

Hybrid positioning may be configured to provide position estimates, on request, using the best of all the available information. Example applications might be:

1. Logistics operations, in which managers wish to determine where assets are, even though they may temporarily be inside in a depot. In this application, hybrid positioning is activated on request, and if the device does happen to be inside a building, then the accuracy provided by CellLocate® when indoors is sufficient to establish at which depot the device is located.
2. Alert applications, where the users want to report their location, even if they go indoors. Best performance is achieved in such applications by periodic hybrid position requests by the user's device to maintain a current estimate of the environment, and so give an excellent ability to respond with an accurate location in the event of an alert.
3. Localized operations, where the position awareness is desired over a small locality or site, such as a hospital or village. In this type of operation, the locality to be covered can be surveyed prior to usage, by walking around the region doing periodic hybrid position requests, and thereby gathering detailed info on the cellular environment by CellLocate® for use in the application.

## 6.2 Positioning sensors

The following positioning sensors are supported:

- **GNSS receiver sensor**: the positioning chip or module is connected to the cellular module as described in previous sections and is configured by `+ULOCGNSS` AT command (the configuration includes the set of GNSS aiding modes and, if the connected receiver is multi-GNSS, the GNSS systems allowed to optimize the GNSS position calculation process).
    - When asking for an assisted GNSS position estimation via the `+ULOC` AT command (i.e. `AT+ULOC=2,3…` or `AT+ULOC=2,1,…`), a complete assistance (satellite ephemerides / almanac, a priori position and time) is received from the service. This interaction with the service is mapped to the "AssistNow plans" (see Thingstream IoT Location-as-a-Service pricing [16]). When a GNSS fix is obtained, this is automatically submitted to the service together with the cell visibility information.
- **Cellular sensor**: CellLocate® provides an estimated location based on visible network cell information reported by the cellular module and is configured by `+ULOCCELL` AT command. When CellLocate® is activated, a data connection to the CellLocate® server is established and the network cell information is passed to the server which provides an estimation of the device

position based on the cell information. When using CellLocate®, the position accuracy is not predictable and is determined by the availability in the database of previous observations within the same area. CellLocate® does not require itself a GNSS receiver to be present or active, however the performance of the hybrid positioning is much better if GNSS is present so new records can be submitted to the database.

  - When using the CellLocate® sensor alone (`AT+ULOC=2,2,…`), the interaction with the service is mapped to the "CellLocate plan" (see Thingstream IoT Location-as-a-Service pricing [16]).

- **Autonomous sensor (AS)**: the last known position (if available), with an accuracy that is degraded according to the elapsed time since then.

☞ Whenever a GNSS fix may be submitted to the AssistNow/CellLocate® service (for example, when GNSS receiver and CellLocate® sensors are used simultaneously with the `AT+ULOC=2,3,…` command), the interaction with the service is mapped to the "AssistNow plans" (see Thingstream IoT Location-as-a-Service pricing [16]).

Once the sensors are configured and a position request is triggered, the sensors are fully controlled by the cellular module. The cellular module automatically switches the sensors on, optimizes the power consumption, drives the position estimate methods and aiding/GNSS modes, and outputs the estimated position together with its uncertainty.

Figure 30 and Figure 31 show the sequence of the exchanged messages between involved elements when Hybrid positioning or stand-alone CellLocate® methods are used.

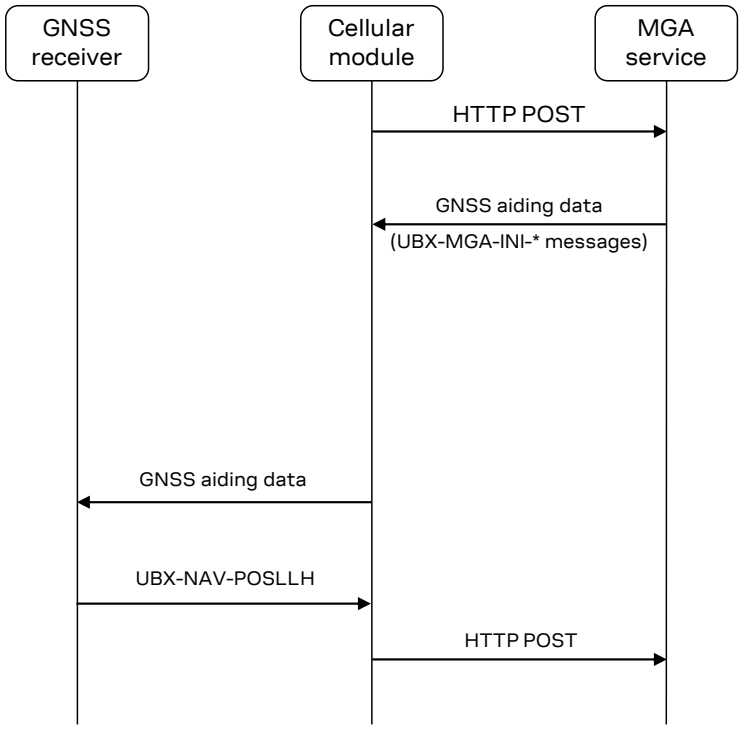


**Figure 30: Hybrid positioning message sequence**

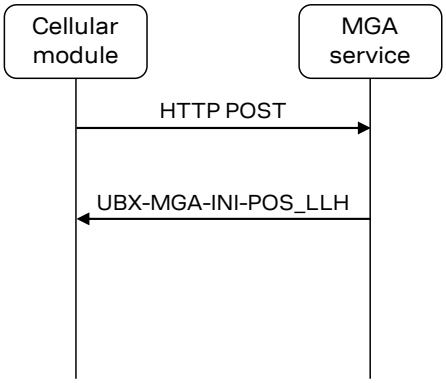


**Figure 31: Stand-alone CellLocate® message sequence**

☞ Stand-alone CellLocate® does not require a GNSS receiver and therefore is suitable for applications which do not require high positioning accuracy but where current consumption, compactness and cost reduction must be reduced to a bare minimum. Being cellular localization based on the cell(s) seen by the cellular module, the position estimation cannot be derived if the reported cell information is not available in the database.

☞ If the CellLocate® server, for whatever reason, cannot be reached during the `+ULOC` AT command execution, then the position will be calculated only using the GNSS sensor. The detailed response allows identification of the sensor that produced the position estimate.

The solution returned by CellLocate® is very much dependent on how well the database is populated in the specific area of interest. If only sparse observations are present, the accuracy of the solution and the estimated uncertainty will be quite large. Using `+ULOC` AT command in hybrid mode automatically submit new records to the database (even without GNSS aiding configured). In this way a device, with a GNSS receiver and a cellular module, will experience an improvement in the CellLocate® performance as time goes by since it contributes to the coverage of the area of interest.

The arrangement of mobile network cells does not remain static (e.g. new cells are continuously added or existing cells are reconfigured by the network operators). For this reason, when a hybrid positioning method has been triggered and the GNSS receiver calculates the position, a database self-learning mechanism has been implemented so that these positions are sent to the server to update the database and maintain its accuracy.

## 6.3 Basic functionality

The two hybrid positioning sensors (GNSS and CellLocate®) are configured using AT commands (sensor configurations are explained later). When the +ULOC AT command triggers the sensor, the cellular module drives the position calculation process and provides the position estimate based on the sensor combination that best fulfills the user requirements previously configured.

☞ Hybrid positioning and communication with the GNSS receiver through the cellular system features are mutually exclusive, and the activation of hybrid positioning requires the previous deactivation of communication with the GNSS receiver via +UGPS AT command.

The hybrid positioning function performed by the `+ULOC` AT command is controlled to meet the requirements of the particular application by the key parameters:

- The desired target accuracy
- The timeout during which a position must be returned

When the timeout has expired or the required position accuracy is satisfied, a URC provides the position together with its uncertainty.

Figure 32 shows the general flow of the hybrid positioning function producing a position estimate.

To avoid unnecessary activation of the sensors, an initial check is carried out, and when hybrid positioning is used and before starting up the allowed sensors (GNSS and/or cellular), the cellular module immediately calculates a position estimate. This considers:

- The solution from the autonomous sensor: the last known position if available, with an accuracy that isdegraded according to the elapsed time since then: it is assumed a speed equal to 120 km/h to degrade the position respect to time
- Information provided by the serving cell, such as the country code

If the uncertainty of this estimate is already better than the target accuracy, then this position is output without starting up the allowed sensors.

If the uncertainty is poorer than the target one (or if no last known position is available), the cellular module powers up the allowed sensors and drives the position calculation process to output the position based on the sensors' combination, which better fulfills the `+ULOC` configuration.

As explained in the following sections, sensors (GNSS/CellLocate®/AS) are started up and operated as permitted by and in accordance with the predefined sensor configurations. The configuration settings may, for example, enable or disable the use of the CellLocate® service. For the complete list of configuration supported by `+ULOC` AT command, see the related u-blox AT command manual [3][4].

The GNSS receiver uses the sensors to repeatedly attempt to produce and refine a position fix, and may also use assistance information and position estimate from the CellLocate® service.

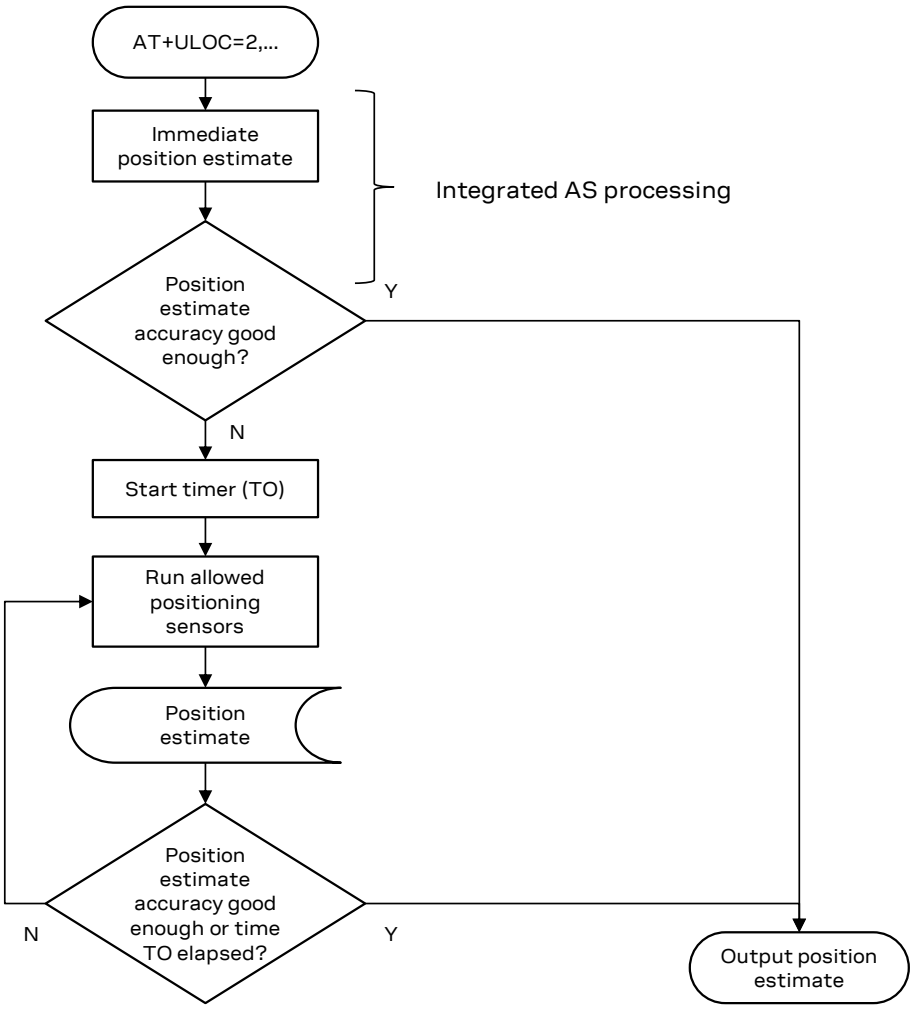


**Figure 32: Hybrid positioning flow diagram**

In due course, the hybrid positioning feature either:

- Produces a position fix with an uncertainty figure that is at least as good as that requested
- Experiences a timeout – in which case it reports the current best available estimate, together with its uncertainty

The behavior of the hybrid positioning feature is determined by the configuration of the sensors and of the setting of the accuracy and timeout parameters. For example:

- To get the best possible position fix, set the desired accuracy very small, e.g. 1 m, and the timeout period duration long. The hybrid positioning feature then runs to the end of the timeout period, and produces the final, best, output position fix
- To get a position estimate with the minimum energy consumption for maximum battery life, set a large desired accuracy figure for the hybrid positioning, e.g. 1 km, (see Figure 32, most likely the AS sensor position degraded or the GNSS one will be quickly returned if the time spent is below 30 s)

☞ u-blox is extremely mindful of user privacy. When a position is sent to the CellLocate® server, u-blox is unable to track the SIM used or identify the specific device.

☞ For the syntax description of `+ULOC`, `+ULOCCELL`, `+ULOCGNSS` and `+ULOCIND` AT commands, see the SARA-R5 series AT commands manual [3] or SARA-R4 series AT commands manual [4].

☞ The detailed response provides useful information about the sensor used to estimate the position. When the sensor reported is “0” this means that the device has been able to calculate the position to sufficient accuracy immediately by the integrated AS sensor, and has output this immediate position estimate.

## 6.4 GNSS sensor setup

The `+ULOCGNSS` AT command sets up the GNSS sensor for hybrid positioning and timing. It is possible to configure which aiding types and GNSS systems (see section 3) are available to the GNSS sensor. The additional parameters, listed below, are available for modifying the GNSS receiver behavior. These are strictly related to the GNSS receiver. The parameters are sent at GNSS power-on and are not saved within the receiver. The default values are the same as those on the positioning chip/module. For values and additional details about their effect, see the u-blox receiver description related to the u-blox GNSS receiver [10]:

| UBX-M8030 receiver messages | UBX-M10050 receiver messages | Description |
|---|---|---|
| `UBX-CFG-PM2` | `UBX-CFG-VALSET CFG-PM group` | Configure the power save mode of the GNSS by setting the optimization target flag in power consumption or in default mode. |
| `UBX-CFG-NAVX5` | `UBX-CFG-VALSET CFG-NAVSPG group` | Configure the minimum number of satellites for navigation, minimum satellite signal level for navigation and if the initial fix must be 3D. |
| `UBX-CFG-NAV5` | `UBX-CFG-VALSET CFG-MOT group` | Configure the static hold mode: allows the navigation algorithms to decrease the noise in the position output when the velocity is below a pre-defined “static hold threshold”. This reduces the position wander caused by environmental issues such as multi-path and improves position accuracy especially in stationary applications. By default, static hold mode is disabled. |
| `UBX-CFG-SBAS` | `UBX-CFG-VALSET CFG-SBAS group` | Enable/disable: satellite based augmentation systems (SBAS) is an augmentation technology for GNSS, which calculates GNSS integrity and correction data with ranging and integrity monitoring stations (RIMS) on the ground and uses geostationary satellites (GEOs) to broadcast GNSS integrity and correction data to GNSS users. The correction data is transmitted on the GNSS L1 frequency (1575.42 MHz), and therefore no additional receiver is required to use the correction and integrity data |

| UBX-M8030 receiver messages | UBX-M10050 receiver messages | Description |
|---|---|---|
| UBX-CFG-ITFM | UBX-CFG-VALSET CFG-ITFM group | Configure Jamming/Interference monitor: enables/disables the indicator, sets the antenna type, broadband jamming detection threshold and continuous wave jamming detection threshold |
| UBX-CFG-GNSS | UBX-CFG-VALSET CFG-SIGNAL group | Configure the GNSS system channel sharing configuration and activation for a multi-GNSS receiver. For details about valid configurations, see the u blox receiver description related to the u-blox GNSS receiver [10] [11]. |

## 6.5 Cellular sensor setup

### 6.5.1 Cellular location sensor +ULOCCELL

The +ULOCCELL AT command pre-configures the device to determine which cell information must be reported to the CellLocate® server for the position estimation as follows:

- "Normal scan": the cellular module only reports the parameters of the neighboring visible cells designated by the network operator, which are normally collected by the module during its "network" activity. This configuration is suitable for a quick update of location
- "Deep scan": the cellular module scans and reports all visible cells. This gives not only the parameters of the visible cells of the serving network operator, but also the cells of all other available network operators, thus increasing the probability of obtaining a successful position estimation. Although this takes a bit longer time (approx. 30 s to 2 minutes is needed to perform a deep scan), and requires more communication traffic, as more data is sent to the server (few bytes for each cell), coverage and reliability are potentially better if hybrid positioning is pre-configured to operate in the "deep scan" mode of operation

☞ Deep scan configuration is generally recommended only for corner cases that must be individually considered.

### 6.5.2 Localization information request +ULOCIND

The `+ULOCIND` AT command enables sending of URCS in the case of `+ULOC` operations. The URC returns the result of the steps of an `+ULOC` operation.

## 6.6 AT command examples

| Command | Response | Description |
|---|---|---|
| AT+UGSRV="cell-live1.services.u-blox.com","cell-live2.services.u-blox.com","abcdefg890 abcdefg890ab",14,4,1,65,0,15 | OK | Configure MGA access. A valid authentication token must be supplied to correctly access the MGA server. GNSS sensor is configured with GPS+GLONASS system for AssistNow Offline aiding (65). |
| AT+UPSDA=0,3 | OK | Activate the data connection. |
| AT+ULOCCELL=1 | OK | Configure for deep network scan. |
| AT+ULOCGNSS=15,,4 | OK | Enable all GNSS aiding modes and set the minimum number of satellites for navigation to 4. |
| AT+ULOCIND=1 | OK | Enable the localization information request status. |

| Command | Response | Description |
|---|---|---|
| AT+ULOC=2,3,1,120,1 | OK | Start hybrid positioning enabling both GNSS and cellular sensor with a timeout of 2 minutes and a desired accuracy of 1 m. The answer mode is detailed. |
| | +UULOCIND: 0,0 | Network scan started. |
| | +UULOCIND: 1,0 | Network scan finished. |
| | +UULOCIND: 2,0 | Requesting CellLocate® service (accuracy was not reached when network scan ended, so the server is queried). |
| | +UULOCIND: 3,0 | Receiving CellLocate® data. |
| | +UULOCIND: 4,0 | A valid GNSS position was available, so this is sent to the server. |
| | +UULOC: 08/07/2015,12:47:41.000,45.7139302,13.7405056,265,5,0,0,5,1,8,2,11 | Output when the desired accuracy is reached or timeout is expired (as in this case). |
| AT+ULOC=2,3,1,120,100 | OK | Start hybrid positioning enabling both GNSS and cellular sensor. The answer mode is detailed. |
| | +UULOCIND: 0,0 | |
| | +UULOC: 08/07/2015,12:49:12.000,45.7137454,13.7404879,246,36,0,0,29,1,5,2,5 | Accuracy is reached (uncertainty is 36 m) before the end of network scan, therefore the CellLocate® server is not queried. |
| | +UULOCIND: 1,0 | Network scan finished. |
| | +UULOCIND: 4,0 | A valid GNSS position was available, so this position + cells footprint is sent to server. |

## 6.7 Best practices for CellLocate® (+ULOC)

Below is a list of the best practices of using hybrid positioning:

- It is suggested to use the detailed response, to know the sensor used in the position returned:
  - Last valid position degraded in time (assuming as speed ~100 km/h)
  - The GNSS fix
  - The CellLocate® location information
- Once the +ULOC AT command is sent, the user/application should wait for the corresponding +UULOC URC before issuing the command again. If a new +ULOC AT command is sent before the +UULOC URC, previous command is aborted, but in this way the position returned is the available position at that time, which may not be the best one.
- The use of the CellLocate® sensor and/or some aiding mode requires a data connection, which must be active until the +UULOC URC is received.
- The network scan type can either be “normal” or “deep”, this influences the amount of data exchanged with the server.
- The network scan type also influences the time needed to complete the scan, so the timeout value should be set accordingly. Be aware that the cell information is sent to the server only when the scan is completed, so setting a small value for the timeout means that the scan information will not be used:
  - “normal” implies sending the information in the report from the serving cell: always available
  - “deep” is similar to sending AT+COPS=5 (extended network search). The duration is related to the number of visible cells: it could last about 1 minute in average.

- The behavior of the hybrid positioning feature is determined by the configuration of the sensors and of the setting of the accuracy and timeout parameters:
  - To get the best possible position fix, set the desired accuracy very small, e.g., 1 m, and the timeout period duration long.
  - To get a position estimate with the minimum energy consumption, for maximum battery life, set a large desired accuracy figure, e.g., 1 km.

⚠ Using the `+ULOC` AT command with GNSS sensor automatically submit new records to the database, even without GNSS aiding configured. The average data transmission amount is about 650 bytes, but up to 1.5 kB can be transmitted: this information shall be considered for data and power optimized applications.

## 6.8 How to implement a data collection unit

The CellLocate® performance is influenced by the number of positions and related network cells reported to the server. If an area is well mapped, then the position reported by the cellular sensor is more precise.

To fill the server database with the cell information of a given area, a cellular module can be used to continuously perform the hybrid positioning requests. An example of an AT sequence to implement a data collection unit is described below and it is divided into the initialization phase (section 6.8.1) and the main loop (section 6.8.2).

### 6.8.1 Initialization

| Command | Response | Description |
|---|---|---|
| `AT+UGSRV="cell-live1.services.u-blox.com","cell-live2.services.u-blox.com","abcdefg890 abcdefg890ab",14,4,1,65,0,15` | `OK` | Optional step only needed if the default server has been modified. |
| `AT+ULOCCELL=1,1,"Track_ID"` | `OK` | Deep network scan configuration: the track id is optional and it is only needed to verify that the module is contributing to the server.<br>“Track_ID” is an example. |
| `AT+UPSD=0,1,"YOUR_APN"` | `OK` | Data connection configuration to communicate with the server.<br>“YOUR APN” is an example. |
| `AT+UPSDA=0,3` | `OK` | Activate the data connection. |

### 6.8.2 Loop

This is the main loop to feed the server database; repeat the sequence. The suggested interval between two subsequent iterations varies depending on the dynamic conditions: 2 minutes for static or low-dynamic, 1 minute for highway speed.

| Command | Response | Description |
|---|---|---|
| AT+UPSND=0,8 | +UPSND: 0,8,X<br>OK | If the data connection is down (X="0") start it using the command AT+UPSDA=0,3. |
| AT+ULOC=2,3,1,60,100 | OK | Start hybrid positioning enabling both GNSS and cellular sensor. |
| | +UULOC: 23/05/2011,12:23:48.000,45.714115,13.740867,292,333,0,000,19,1,7,3,5 | When a result is available wait before starting a new iteration, in this way the calculated position and the harvested cells are sent to the server. |

## 6.9 Best practices for a data collection unit

Below is a list of the best practices of implementing a data collection unit:

- Set the type of network scan to "deep" using command: AT+ULOCCELL=1
- Set the minimum number of satellites for navigation, <minSV> to 4, in +ULOCGNSS AT command.
- If an aiding mode is needed, use AssistNow Offline (in +ULOCGNSS set <aiding> to 2), to limit the data exchange between the module and the server, because the network scan is very sensitive to the data traffic.
- Start the hybrid positioning by enabling both GNSS and CellLocate® sensors. The suggested values are:
  - <timeout> = 60 s for low dynamic or 30 s for high speed (highway)
  - <accuracy> = 100 m

  With these values, the suggested command is: AT+ULOC=2,3,1,120,100
  - The CellLocate® performance depends on how much the database is populated: submitting new fixes will improve the CellLocate® overall performance.
  - Positions submitted to the u-blox database are anonymous, so it is impossible to retrieve the real identity of a device.
  - If the CellLocate® service must be tested, a "tag" is suggested to ease the debugging from the u-blox side:
    - AT+ULOCCELL=1,1,"Tag_ID"

# 7 Time information from cellular modules

☞ Timing features are not supported by SARA-R4 series modules, except the time pulse output (PIO11) of the internal u-blox UBX-M8030, available on the **TIMEPULSE** pin of SARA-R422M8S; then some of the AT commands reported in this section may be not supported on SARA-R4 series modules.

The ability to produce a clock output and timing information is available in the u-blox cellular modules.

Timing information is important for M2M devices, for

- Interpreting sensor information
  - detecting differences and changes
  - interpreting sequences of events
  - identifying "which alarm happened first?"
- Synchronizing distributed applications
  - triggering actions in remote places to take place at particular times
  - to coordinate actions by multiple devices
  - for cross-device functions and applications
- For security
  - detection of attacks, for example by monitoring for disturbance of the local clock

For further details on timing technologies for wireless applications, see the u-blox Accurate Timing for the IoT whitepaper [15].

## 7.1 Sources of timing information

The module may derive time information from the synchronization with the base station and, if fitted, obtain them from a GNSS receiver.

| Source | Availability | Precision | Accuracy |
|---|---|---|---|
| GNSS | Might be limited by weak signals (indoors) or interference (jamming) | Excellent [<50 ns] | Excellent [<50 ns] |
| LTE base station | Widely available | Excellent short term stability [<1 µs], usually good long term stability [<10 µs/day] | Absolute timing may be undefined depending on network deployment.<br>Drift specification is relaxed.<br>Timing observed by modem depends on propagation distance. |

**Table 34: The characteristics of timing sources available to a modem**

A combination of the use of the signals is desirable to meet different usage models (see section 7.3). Using a combination brings advantages of

- Maintaining the ability of providing a timing output
- Improving precision and accuracy

Internally, the module may use timing from one source, to calibrate or to assist in the generation of timing from another source.

## 7.2 Interface of timing information to the application

The inputs and outputs for the timing function are

- Outputs
  - A sequence of time pulses with configurable periodicity and pulse width[3]
  - Single trigger output, with a message labelling the time of the output signal
- Inputs
  - Single interrupt input, with a message returned reporting the time of the input signal

The timing source and the expected uncertainty are output, to enable appropriate interpretation and use by an application.

## 7.3 Usage models

A set of usage models are considered here to illustrate the range of applications and configurations for the module hybrid timing feature

1. A single device, for internal timekeeping
2. A device with GNSS timekeeping, with a fallback to an LTE time base in the case of temporary loss of GNSS
3. Relative timing between a number of local devices
4. Relative timing between devices distributed over a wide area
5. Timing provision for a device deep indoors, with calibration by a reference anchor receiving GNSS
6. Fine time assistance by a reference anchor to improve the GNSS capability of a module

These are described in the following sections. All use cases for timing which are at present considered are for devices which are static, stationary.

### 7.3.1 LTE for measuring timing intervals in a sensor

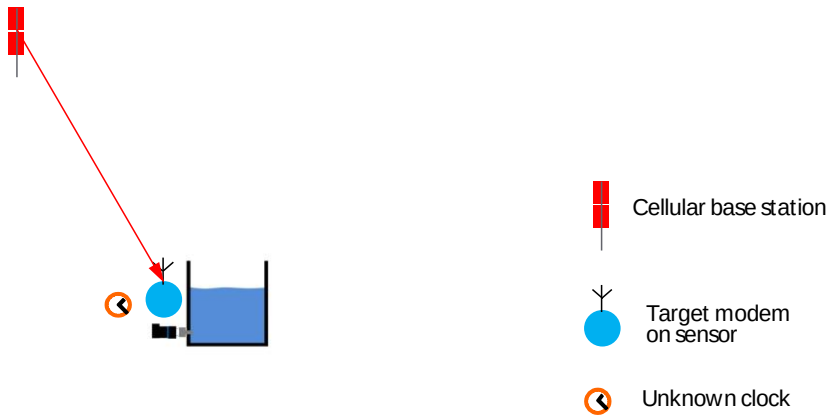


**Figure 33: Using LTE to measure timing intervals**

In the example of Figure 33, the signal from an LTE base station is monitored and provides an accurate clock tick to measure time intervals precisely.

In addition, this synchronization allows to distribute the LTE clock ticks (aligned to LTE frames) also to other sensors.

Sequentially:

- Elapsed time between events in the module can be accurately (better than 1 µs) measured with reference to the LTE base station frame time
- A PPS sequence, aligned with the LTE frame grid (better than 1 µs) is generated.

[3] SARA-R5 "00B" product versions do not allow to configure the pulse

- To achieve long battery lifetime the device can go into a sleep mode, and then when awaking resynchronize to the LTE base station to re-establish the change in time precisely

☞ Note that:

  - The timekeeping is that of the base station
  - The device may select the base station to synchronize with between all the visible base stations. By default, the device synchronizes with the serving cell
  - If the device moves, then the perceived time will change, as the propagation time from the base station changes
  - Time measured on the device relates only to the events at that device, and cannot be compared to events on other devices

### 7.3.2 LTE bridging GNSS as a temporary fallback

A particularly useful example of using the LTE as a timing reference, is when it can provide a fallback to measure time intervals within the device, when GNSS operation is temporarily limited. This will be illustrated considering the example of the synchronization of small cells.

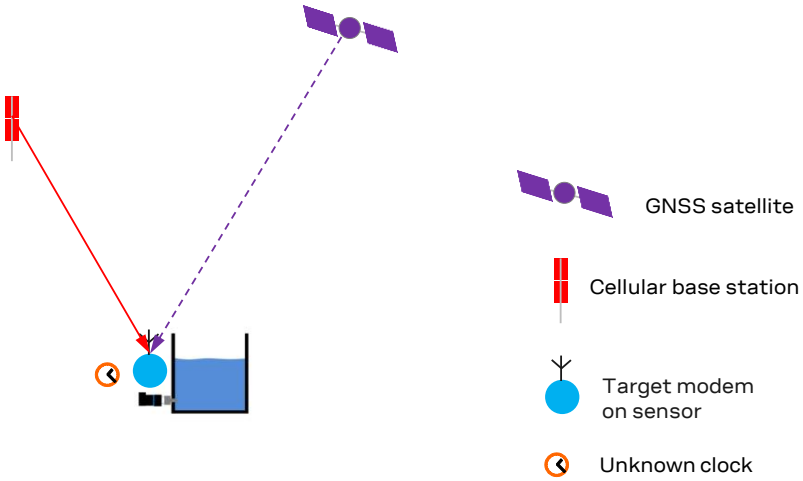


**Figure 34: Using LTE as a fall back, if GNSS becomes unavailable**

In the example of Figure 34 the sensor is provided with a timing reference either from the GNSS receiver or, as a fallback, from LTE receiver.

The product may use the fallback if GNSS:

- Suffers a system failure
- Becomes unavailable because of difficult propagation (such as sunspot activity, or weaker indoor conditions)
- Is accidentally or deliberately jammed

Sequentially:

- Initially the product obtains absolute UTC time from GNSS.
- This absolute time is then used to calibrate the signal received from the LTE base station, so that its absolute time is known
- The timing of the signal received from the LTE base station then continues to be tracked
- The timing reference obtained from LTE base station is used as a fall back option if the GNSS timing reference becomes unavailable

☞ Note that for this use case:

- The same device is doing all the measurements, so the location of the base station does not matter, and does not need to be known
- It is assumed that the device is static
- In the absence of GNSS the device remains locked to the timekeeping of the LTE base station. Therefore, the timekeeping will be determined by that of the LTE base station

### 7.3.3 Relative timing between modules

In the example of Figure 35 a number of sensors are clustered together, with view of the same base station. The application wishes to establish the relative timing between events in a number of modules.

In this example it is assumed that the modules are in the same vicinity, and that

- The delay as a result of the signal propagation is negligible, as far as the application is concerned
- Modules are connected to the same LTE base station
- The relative timing between modules can be precisely estimated (<1 µs), using the base station as a common reference

Sequentially:

- The signal from the LTE base station is used to establish a local clock
- The timestamps by the different modules are compared to establish the relative timing of events at different modules

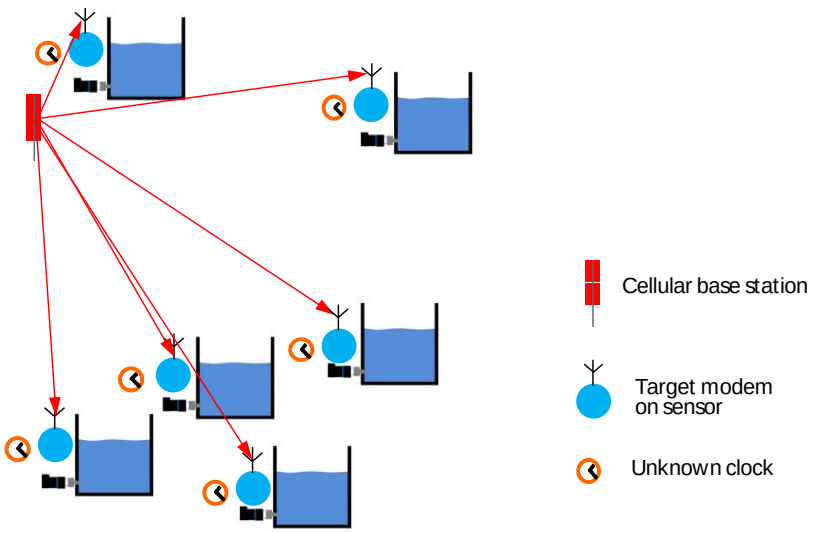


**Figure 35: Relative timing between a cluster modems using a common LTE base station as a reference**

The relative timing of the modules is affected by the relative separations of the different modules to the base station, as illustrated in Figure 36.

**Figure 36: The effect on relative timing of uncertainty in the base station location. This uncertainty is mitigated by using the Timing Advance information from the serving cell.**

The location of the modules might be known, at least approximately, but the location of the serving cell base station used for timing is normally not known. This will lead to uncertainty in the relative timing of the arrival of signals at the modules, and hence in the perceived relative timing at the modules. However, the Timing Advance (TA) information provided by the serving cell allows to compensate for this geometry effect.

As illustrated in Figure 36 for the case of two modules at $A$ and $B$ separated by a distance $d_{AB}$ if the base station is close to $A$ then the signal from the base station arrives at the module at $B$ after a delay of $t_B - t_A = d_{AB}/c$, where $c$ is the speed of light. Two clocks synchronized by receiving this signal will therefore be running with an offset, with the clock at $A$ running in advance of the clock at . Similarly, if the base station happens to be sited close to the location, then the use of the transmitted signal to synchronize the clocks will result in an offset of $t_B - t_A = -d_{AB}/c$. The uncertainty in the relative timing caused by these propagation delays thus depends on the separation between the modules, and on the relative location of the base station and the modules. As we have seen, in the worst case the error is

$$t_B - t_A = \pm d_{AB}/c$$

In principle, for module sensors separated by 300 m this gives a worst case error of ±1 µs. The TA information, made available to the cellular module by the serving cell, permits to compensate this geometric effect with the only limitation given by the granularity of TA of ~0.5 µs.

☞ Note that for this use case:

- The absolute UTC time is not known, but this is not needed for handling relative timing between the modules
- Any disturbance or change in the LTE base station may also affect the relative time measurements by the module, if the measurements by the modules take place at different times. For example, care should be taken when accurately comparing a measurement in the morning by one module, with a measurement in the afternoon by a second module.
- No GNSS is involved or required

### 7.3.4 Modules distributed over a wide area

In some applications sensors are widely distributed across an area. In this case the sensors do not all see the same serving cell or base station.

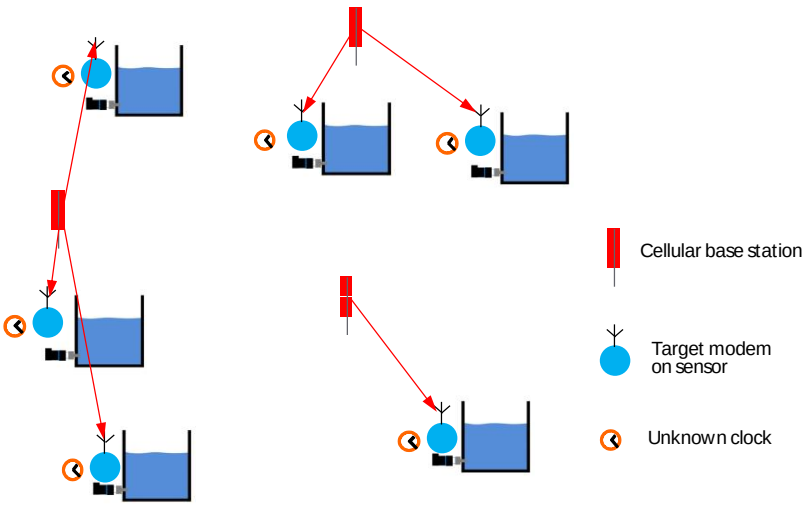


**Figure 37: Timing for modems distributed over a wide area**

In the example of Figure 37 the application wishes to establish the relative timing between events in a number of modules which are distributed over a wide area. The application may wish to coordinate activities in different areas, or to report measurements with knowledge of time.

In this case we may be interested in:

- The interval of time between events on the same device
- The differences in time between events on different devices
- Synchronization of the clocks on the different devices

The most accurate way to do this is to use GNSS, but this is not always applicable, on the grounds of signal availability, or equipment cost. Timing can still be performed using the network, though naturally with some limitations on the accuracy.

Sequentially for such applications:

- The signal from the LTE base station is used by the module to establish its local clock rate, for timing the intervals between events on the single module
- The timestamps from the different modules may be compared using the estimates of the absolute time
- It might also be that the relative time between different base stations is managed by the network operator within limits, for example to maintain connectivity specifications. In which case this can be used to support relative timing between clusters of modules listening to different base stations

☞ Note that for this use case:

  - The relative timing of events on a single module is normally very precise, as it is determined by the timekeeping performance of the LTE system base station (This assumes that the module is stationary, as the absolute time reported by the module will change, if it is moved)
  - For relative timing within each cluster the absolute UTC time does not need to be known accurately
  - For relative timing between clusters, GNSS integrated in at least one sensor module in each cluster may be used to synchronize the different clusters together

### 7.3.5 Local anchor with GNSS giving accurate time

Figure 38 illustrates a further example, addressing applications in which the absolute time is important, but GNSS is not available – perhaps because the module is located deep indoors. In this case an additional module, with GNSS, is installed as a local reference anchor.

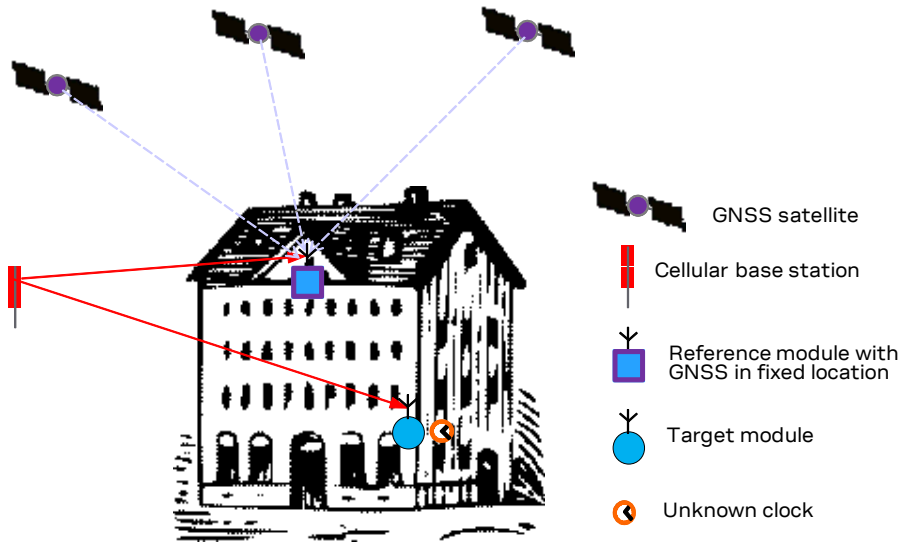


**Figure 38: Using a local anchor with GNSS to calibrate the timing of a signal from an LTE base station**

The anchor has good GNSS, and calibrates the timing of the signals from the cellular base station. The calibration information is shared with other modules which are listening to the cellular base station, so that they can use this as a timing reference.

Sequentially:

- The anchor module performs a GNSS fix, establishing time at the anchor
- The timing of the signal received by the anchor from the LTE base station is measured, and calibrated against the GNSS time. This calibrates the timing of the LTE base station
- The calibration information is communicated to the timing module
- The timing module receives the signal from the LTE base station, and measures its timing
- The calibration information is then used to generate the correct absolute time at the timing module, which is then available for the application

☞ Note that for this use case

  - The anchor is assumed to be placed such that it has good GNSS reception, for the calibration of the signal from the base station
  - If GNSS reception by the anchor is lost for some reason (such as interference) then timing continues to be provided to the modems by reference to the LTE base station

## 7.4 Application interface

Some AT commands have been implemented explicitly for providing and configuring timing information to the user application.

### 7.4.1 Time information +UTIME

The +UTIME AT command is intended to provide timing information from the cellular module via three operating modes:

- Configurable Pulse Per Second (PPS) output sequence from a GPIO pin
- single time pulse output from a GPIO pin and a URC with the accurate time stamp of the pulse
- time stamp of external interrupts (received in a dedicated GPIO pin)

Time pulses will be generated using one of the supported GPIO pins of the cellular module (see the sections 2.2.1.3 and 2.3.1.4). Similarly, the external interrupts will be received using one of the supported GPIO pins of the cellular module (see sections 2.2.1.3 and 2.3.1.4).

PPS time pulse sequence can be configured both in periodicity (0.5 to 4 s) and width (10 ms to 990 ms).

The time information source may be GNSS or the autonomous time propagation (LTE module clock). In addition unsolicited messages are output when the device changes the source of the timing – in particular when GNSS becomes unavailable, and available again (see +UTIMEIND on section 7.4.2). It is possible to configure which aiding types and GNSS systems (see section 3) are available to the GNSS sensor by the +ULOCGNSS AT command.

Two (or more) modules registered to the same base station (see usage model in section 7.3.3) can be synchronized if the +UTIME AT command is sent simultaneously (+/- 1s) to both devices.

☞ The +UTIME AT command requires the exclusive access to the GNSS sensor. If the `+UTIME` AT command is enabled using GNSS sensor, when this is already in use (e.g. by +UGPS AT command), it will return an error result code.

If the GNSS is turned on using the +UTIME AT command, it cannot be turned off using another interface (e.g. AT+UGPS=0).

☞ The pulse configuration is not available in SARA-R5 “00B” product versions.

### 7.4.2 Time information request +UTIMEIND

☞ This section does not apply to SARA-R4 series modules.

The `+UTIMEIND` AT command enables the sending of URCs during `+UTIME` operations. The URC provides the status of the timekeeping in the module.

In particular, it informs the user about:

- The operation in progress
- The source used for timekeeping
- Whether time is in UTC or on an arbitrary time scale
- Generic results of intermediate operation steps

☞ In case of alignment with UTC time (by GNSS), it also returns the discontinuity in the local time. The knowledge of this discontinuity is needed to compare in time two events occurred before and after the re-synchronization.

### 7.4.3 UTIME configuration +UTIMECFG

This command sets the UTIME configuration parameters.

The user can configure a time offset to correct the local time scale or align it with the UTC time.

For example, considering the usage model in section 7.3.5 when the anchor module calibrates the timing of the LTE base station against the GNSS time, it returns a URC (+UTIMEIND) providing the discontinuity in the local time. This calibration information can be used to generate the correct absolute time at the timing module (without GNSS) by means of the `+UTIMECFG` AT command.

### 7.4.4 Synchronization on a specific cell of any MNO +UTIMECELLSELECT

This command forces the module to synchronize and lock on a specific LTE-M/NB-IoT cell of any specific MNO.

The user only sets the PLMN and the EARFCN, P-CID pairs to make the module locked and camped on a specific cell.

In section 7.3.1, a user case is described where the local time in the modem is aligned with the LTE frame grid of a base station. The reference base station may be any LTE-M/NB-IoT cell in view of any MNO. A SIM card is not needed by the modem to operate under these conditions.

The synchronization with the base station is affected by the time of flight of the signal, this can be compensated using the Timing Advance (TA).

The main purpose of `+UTIMECELLSELECT` is to achieve a successful Cell Selection (IDLE-state) and obtain the TA information from RACH process. Then, the UE attach procedure is aborted before Msg3 (RRC Connection Request). Optionally, the user can choose to skip the RACH procedure and provide the TA value as input, if known.

The obtained TA value will be automatically compensated during the PPS output generation (e.g. `AT+UTIME=1,2`) which will result aligned with the LTE frame.

The feature can work only if cellular functionality is switched off by means of the AT+CFUN=0 or `AT+CFUN=4` AT command. So, connectivity is not supported, and reselections are inhibited.

## 7.5 Expected performance

The target specifications for the hybrid timing function for u-blox LTE platforms are shown in Table 35.

| Timing | GNSS | LTE |
|---|---|---|
| Relative between events[1] | < 0.1µs | < 1 µs for a limited period[2] |
| Relative between modems | < 1µs | < 1 µs |
| Timing relative to base station[3] | | < 0.5 µs[4] |
| Absolute, UTC[5] | < 0.1µs for timestamp<br>< 0.5µs for 1pps output | ~10 µs for one day[7] |
| | | < 1 µs for a limited period[2] |
| Anchor Assisted absolute UTC | | < 1 µs |

**Table 35: Expected timing precision and accuracy, for CellTime hybrid timing on the u-blox LTE modems**

Notes

1. Relative timestamp of two events on the same (stationary) module
2. The measured timing interval will become less accurate over time, depending on the drift of the LTE base station, and whether the base station timing is controlled using reference GNSS receivers by MNOs.
3. The timekeeping from a stationary module, relative to the timekeeping of the local LTE base station, over a period of time. If the LTE base station drifts, so will the timekeeping and output of the module. This assumes that there is no calibration (which actually would introduce additional errors into the measurement of relative timing)
4. There will also be a time offset, depending on the separation of the module from the base station
5. Strictly speaking this is GNSS time, not UTC. Assuming the base station signal is not calibrated using a GNSS receiver, and that the GNSS receiver has visibility of at least 4 GNSS satellites
6. In the temporary absence of GNSS, depends on the drift of local LTE base station. This is typically managed by the network operator to be within a limit, over time
7. Worst case scenario if base station clock is not controlled using a reference GNSS receiver by MNOs.

## 7.6 AT commands examples

### 7.6.1 Activation of UTIME- PPS mode

| Command | Response | Description |
|---|---|---|
| AT+UTIMEIND=1 | OK | Enable the timing information request status. |
| AT+UTIMECFG=0,0 | OK | Reset the time offset configuration |
| AT+UGPIOC=19,22 | OK | Configure the output pin for the PPS. |
| AT+UTIME=1,1,1,200 | OK | Request PPS output generation enabling GNSS/LTE (best effort) with 1 s period and 200 ms width. Period/width parameters are optional and have 1 s/100 ms as default values[4] |
| | +UUTIMEIND: 1,0,0,0 | Initialization of sensors after starting UTIME operations (PPS mode). |
| | +UUTIMEIND: 4,2,0,0 | Synchronized with LTE BS (local time scale): start PPS output. |
| | +UUTIMEIND: 4,1,1,0 | Synchronized with GNSS TP (UTC time): align PPS output. |
| | +UUTIMEIND: 4,1,1,1,295045451,0 | Alignment with UTC time: offset compared to local time scale. |
| | +UUTIMEIND: 4,2,1,0 | GNSS fix lost. Synchronized with LTE BS: keep PPS output aligned to UTC time. |
| AT+UTIMECFG=3000,0 | OK | Configure a time offset of 3000 ns: re-align PPS output. |
| AT+UTIME=0 | OK | Turn off the UTIME operations. |
| | +UUTIMEIND: 0,3,1,0 | UTIME operations are off. |

### 7.6.2 Activation of UTIME – One shot mode

| Command | Response | Description |
|---|---|---|
| AT+UTIMEIND=1 | OK | Enable the timing information request status. |
| AT+UTIMECFG=0,0 | OK | Reset the time offset configuration. |
| AT+UGPIOC=19,22 | OK | Configure the output pin for the time pulse. |
| AT+UTIME=2,1 | OK | Request single output pulse with time stamp enabling GNSS/LTE (best effort). |
| | +UUTIMEIND: 2,0,0,0 | Initialization of sensors after starting UTIME operations (one shot mode). |
| | +UUTIMEIND: 4,2,0,0 | Synchronized with LTE BS (local time scale): generate single output pulse with timestamp (default time origin: 1st of January 2018). |
| | +UUTIME: 01/01/2018,00:00:03,123.456789,0.000000000,0 | Timestamp of a single pulse (local time scale). |
| | +UUTIMEIND: 4,1,1,0 | Synchronized with GNSS TP (UTC time): align timestamps to UTC time. |
| | +UUTIMEIND: 4,1,1,1,22962682,74774978 | Alignment with UTC time: offset compared to local time scale. |
| AT+UTIME=2,1 | OK | Request single output pulse with time stamp (UTIME already initialized). |
| | +UUTIME: 15/05/2020,10:12:34,123.456789,0.000001234,1 | Timestamp of a single pulse (UTC time scale). |

[4] The pulse period and width are not configurable in SARA-R5 "00B" product versions

| Command | Response | Description |
|---|---|---|
| AT+UTIMECFG=3000,60 | OK | Configure a time offset of 3000 ns and 60 s: re-align timestamps. |
| AT+UTIME=0 | OK | Turn off the UTIME operations. |
| | +UUTIMEIND: 0,3,1,0 | UTIME operations are off. |

### 7.6.3 Activation of UTIME – Timestamping of external interrupts mode

| Command | Response | Description |
|---|---|---|
| AT+UTIMEIND=1 | OK | Enable the timing information request status. |
| AT+UTIMECFG=0,0 | OK | Reset the time offset configuration. |
| AT+UGPIOC=33,23 | OK | Configure the input pin for the external interrupts. |
| AT+UTIME=3,1 | OK | Request timestamping of external interrupts enabling GNSS/LTE (best effort). |
| | +UUTIMEIND: 3,0,0,0 | Initialization of sensors after starting UTIME operations (timestamp of ext-int mode). |
| | +UUTIMEIND: 4,2,0,0 | Synchronized with LTE BS (local time scale): start timestamping external interrupts (default time origin: 1st of January 2018). |
| | +UUTIME: 01/01/2018,00:00:03,123.456789,0.000000000,0 | Timestamp of an external interrupt (local time scale). |
| | +UUTIMEIND: 4,1,1,0 | Synchronized with GNSS TP (UTC time): align timestamps to UTC time. |
| | +UUTIMEIND: 4,1,1,1,22962682,74774978 | Alignment with UTC time: offset compared to local time scale. |
| | +UUTIME: 15/05/2020,10:12:34,123.456789,0.000001234,1 | Timestamp of an external interrupt (UTC time scale). |
| | +UUTIMEIND: 4,2,1,0 | GNSS fix lost. Synchronized with LTE BS: keep timestamps aligned to UTC time. |
| AT+UTIMECFG=3000,60 | OK | Configure a time offset of 3000 ns and 60 s: re-align timestamps. |
| AT+UTIME=0 | OK | Turn off the UTIME operations. |
| | +UUTIMEIND: 0,3,1,0 | UTIME operations are off. |

### 7.6.4 Synchronize two modules using LTE frame

Two modules registered to the same Base Station (see use case in section 7.3.3) can be synchronized if the +UTIME AT command is sent simultaneously (+/- 1s) to both devices.

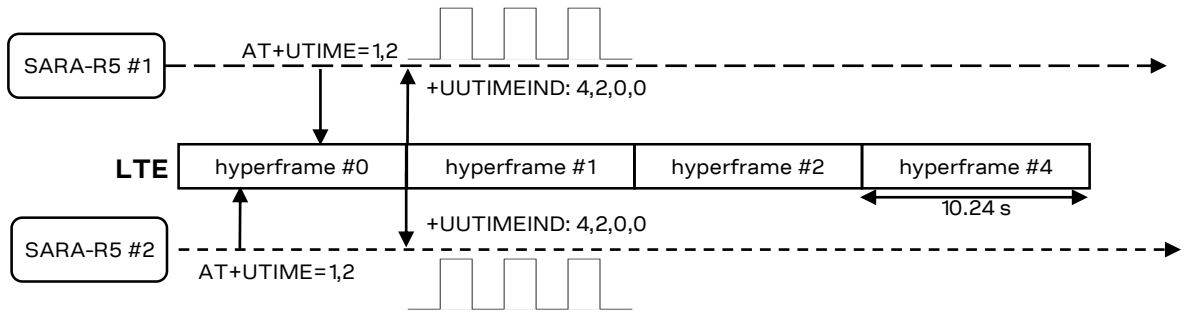


**Figure 39: Example of time synchronization between two modules registered to the same base station**

### 7.6.5 Synchronization on a specific cell (+UTIMECELLSELECT) and activate +UTIME- PPS mode

| Command | Response | Description |
|---|---|---|
| AT+CFUN=0 | OK | Switch off cellular functionality. |
| AT+UTIMECELLSELECT=1,"123456",2450,1 | OK | Sync on a specific cell:<br>• MCC: 123<br>• MNC: 456<br>• EARFCN: 2450<br>• P-CID: 1 |
| | +UUTIMECELLSELECT: 1,160 | Synchronization enabled and successful, camped on the requested cell with TA=160Ts (~5208 ns). |
| AT+UGPIOC=19,22 | OK | Configure the output pin for the PPS. |
| AT+UTIMEIND=1 | OK | Enable the timing information request status indications. |
| AT+UTIME=1,2 | OK | Request PPS output generation (LTE source). |
| | +UUTIMEIND: 1,0,0,0 | Initialization of sensors after starting UTIME operations (PPS mode). |
| | +UUTIMEIND: 4,2,0,0 | Synchronized with LTE BS (local time scale): start PPS output. |
| | | |
| AT+UTIMECFG=3000,0 | OK | Configure a time offset of 3000 ns: re-align PPS output. |
| AT+UTIME=0 | OK | Turn off the UTIME operations. |
| | +UUTIMEIND: 0,3,0,0 | UTIME operations are off. |

### 7.6.6 Synchronization on a specific cell without RACH request (+UTIMECELLSELECT) and activate +UTIME – PPS mode

| Command | Response | Description |
|---|---|---|
| AT+CFUN=0 | OK | Enable the airplane mode. |
| AT+UTIMECELLSELECT=2,"123456",2450,1,80 | OK | Sync on a specific cell:<br>• MCC: 123<br>• MNC: 456<br>• EARFCN: 2450<br>• P-CID: 1<br>TA (known): 80 |
| | +UUTIMECELLSELECT: 1,80 | Synchronization enabled and successful, camped on the requested cell with known TA=80Ts (~2604 ns). |
| AT+UGPIOC=19,22 | OK | Configure the output pin for the PPS. |
| AT+UTIMEIND=1 | OK | Enable the timing information request status indications. |
| AT+UTIME=1,2 | OK | Request PPS output generation (LTE source). |
| | +UUTIMEIND: 1,0,0,0 | Initialization of sensors after starting UTIME operations (PPS mode). |
| | +UUTIMEIND: 4,2,0,0 | Synchronized with LTE BS (local time scale): start PPS output. |
| AT+UTIMECFG=3000,0 | OK | Configure a time offset of 3000 ns: re-align PPS output. |
| AT+UTIME=0 | OK | Turn off the UTIME operations. |
| | +UUTIMEIND: 0,3,0,0 | UTIME operations are off. |

## 7.7 Best practices for time information (+UTIME, +UTIMECELLSELECT)

Below is a list of the best practices of receiving the most accurate time information available from the cellular module:

- The `+UUTIMEIND` URC reports which sensor provides the time information:
  - GNSS clock (from the GNSS fix)
  - LTE base station
- Once the `+UTIME` AT command is issued, the user/application should wait for the `+UUTIMEIND: 4,2,0,0` indication (synchronized to LTE base station).
- The use of the `+UTIME` AT command could require a data connection, e.g., for GNSS aiding (AssistNow Online, AssistNow Offline) for faster and more accurate GNSS performance.
  - The user shall set the APN parameters of the network provider (`AT+UPSD=0,1,"apn.name"`) and activate the PDP context (`AT+UPSDA=0,3`)
  - The user shall configure the servers that provide time information using the `+UGSRV` AT command, e.g., `AT+UGSRV="cell-live1.services.u-blox.com","cell-live2.services.u-blox.com","token"`.
  - GNSS constellations of interest can be set with the `+ULOCGNSS` AT command
- Configure the output pin (GPIO6) for the time pulse output by the `AT+UGPIOC=19,22` command
- Configure the input pin (EXT_INT) for the time stamp of external interrupts by the `AT+UGPIOC=33,23` command
- In case of SARA-R500S / SARA-R510S / SARA-R500E with an external GNSS, the user must configure two additional pins to allow calibration and interaction with the external GNSS:
  - Connect the SDIO_CMD pin of SARA-R500S / SARA-R510S / SARA-R500E with the PPS pin of the external GNSS
  - Configure the input pin (SDIO_CMD) for the external GNSS time pulse input (input to receive an accurate time reference, as a sequence with 1 PPS from an external GNSS system) by means of the `AT+UGPIOC=46,28` command
  - Connect the GPIO4 pin of SARA-R500S / SARA-R510S / SARA-R500E with the EXT-INT pin of the external GNSS
  - Configure the output pin (GPIO4) for the external GNSS time stamp of external interrupt (output triggering via interrupt the generation of an URC timestamp from an external GNSS system) by means of the `AT+UGPIOC=25,29` command
- To get time information from the GNSS, the application waits for a valid fully resolved fix and time. This could last from some tens of seconds to up to 2 minutes, depending on the environment and satellites in view.
- `+UTIMECELLSELECT` is intended only for CellTime purpose, to allow synchronization with any LTE-M/NB-IoT cell:
  - SIM card is not needed.
  - +UTIMECELLSELECT can work only if cellular functionality is switched off (`+CFUN: 0` or `+CFUN: 4`). Connectivity is not supported, and reselections are inhibited.
  - The `AT+COPS=5` command can be used to determine the available EARFCN and P-CID numbers.
  - The `AT+COPS=5` command and the test command shall not be used when the lock is enabled, because the results would be inconsistent.
  - Once the Timing Advance (TA) value is obtained, it will be automatically compensated during the PPS output generation (e. g., `+UTIME: 1,2`)

# Appendix

# A Compatibility matrices

## A.1 Cellular module and GNSS receiver compatibility matrix

Table 36 summarizes compatibility between cellular modules and GNSS receivers.

| Cellular module | Positioning chips and modules | Positioning chips and modules FW version |
|---|---|---|
| SARA-R500S, SARA-R510S, SARA-R500E, SARA-R410M, SARA-R412M, SARA-R422S-00B | u-blox M8 | SPG 2.01, SPG 3.01, SPG 3.51 |
| SARA-R422S-01B | u-blox M8 | SPG 2.01, SPG 3.01, SPG 3.51 |
| | u-blox M10 | SPG 5.10 |

**Table 36: Cellular module and GNSS receiver compatibility matrix**

## A.2 “GNSS Tx data ready” compatibility matrix

| GNSS | Status |
|---|---|
| u-blox M8 | Supported, but needs to be configured via +UGUBX |
| u-blox M10 | Supported, but needs to be configured via +UGUBX |

**Table 37: “GNSS Tx data ready” compatibility matrix**

As an example, the command to configure the “GNSS Tx data ready” on the UART1 TX pin of an external u-blox M8 GNSS receiver is:

```
AT+UGUBX="B5 62 06 00 28 00 01 00 00 00 D0 08 00 00 00 E1 00 00 00 00 00 00 00 00 00 00
00 00 19 00 84 00 00 00 00 00 00 00 07 00 07 00 02 00 00 00 95 C3"
```

Where the meaning is:

| Bytes | Meaning |
|---|---|
| B5 62 | UBX message header |
| 06 00 | CFG-PRT message |
| 28 00 | Message length (40 bytes) |
| 01 | Port UART 1 |
| 00 | Reserved |
| 00 00 | txReady |
| D0 08 00 00 | UART mode |
| 00 E1 00 00 | Baudrate |
| 00 00 | In protocols (none) |
| 00 00 | Out protocols (none) |
| 00 00 | Flags |
| 00 00 | Reserved |
| 00 | Port I2C |
| 00 | Reserved |
| 19 00 | txReady (enable pin 6) |
| 84 00 00 00 | DCC Mode |
| 00 00 00 00 | Reserved |
| 07 00 | In protocols |
| 07 00 | Out protocols |
| 02 00 | Flags |
| 00 00 | Reserved |

| Bytes | Meaning |
|---|---|
| 95 C3 | Checksum |

**Table 38: +UGUBX "GNSS Tx data ready" command (M8) parameter meaning**

When an external u-blox M10 GNSS receiver is used, the same feature can be configured with the following message:

```
AT+UGUBX="B5 62 06 8A 09 00 00 01 00 00 05 00 52 10 00 01 60 B5 62 06 8A 1E 00 00 01 00
00 01 00 A2 10 01 02 00 A2 10 00 03 00 A2 20 01 04 00 A2 30 00 00 05 00 A2 20 00 7A E8"
```

Where the meaning is:

| Bytes | Meaning |
|---|---|
| B5 62 | UBX message header |
| 06 8A | CFG-VALSET message |
| 09 00 | Message length (9 bytes) |
| 00 | Message version |
| 01 | Layer: RAM |
| 00 00 | reserved |
| 05 00 52 10 | key ID: 0x10520005, CFG-UART1-ENABLED |
| 00 | Value: disabled |
| 01 60 | Checksum |
| | |
| B5 62 | UBX message header |
| 06 8A | CFG-VALSET message |
| 1E 00 | Message length (30 bytes) |
| 00 | Message version |
| 01 | Layer: RAM |
| 00 00 | reserved |
| 01 00 A2 10 | key ID: 0x10A20001, CFG-TXREADY-ENABLED |
| 01 | Value: enabled |
| 02 00 A2 10 | key ID: 0x10A20002, CFG-TXREADY-POLARITY |
| 00 | Value: high-active |
| 03 00 A2 20 | key ID: 0x20A20003, CFG-TXREADY-PIN |
| 01 | Value: pin number: 1 |
| 04 00 A2 30 | key ID: 0x30A20004, CFG-TXREADY-THRESHOLD |
| 00 00 | Value: default (always trigger TX ready pin) |
| 05 00 A2 20 | key ID: 0x20A20005, CFG-TXREADY-INTERFACE |
| 00 | Value: I2C interface |
| 7A E8 | Checksum |

**Table 39: +UGUBX "GNSS Tx data ready" command (M10) parameter meaning**

☞ The "GNSS Tx data ready" command configuration is not required for the SARA-R510M8S, SARA-R422M8S and the SARA-R422M10S modules as it is already integrated in the firmware and sent automatically to the GNSS if the Tx data ready feature has been enabled via `+UGPRF` AT command.

## A.3 AssistNow Autonomous compatibility matrix

| GNSS | Status |
|---|---|
| u-blox M8 | Partially supported (see u-blox M8 receiver description [10] for any limitation) |
| u-blox M10 | Partially supported (see u-blox M10 receiver description [11] for any limitation) |

**Table 40: "AssistNow Autonomous" compatibility matrix**

# B CellLocate® customer proxy server

The proxy server implementation for the devices using HTTPS is straightforward. The customer's proxy server must listen on port 443 and once a request is received, forward it on to the u-blox CellLocate® service without token acknowledgement.

The port 443 (the default port for all HTTPS connections) must be opened if not already opened.

The HTTPS is a connection-oriented request-response protocol, whereas the UDP is connectionless. This means once the client has sent a request to the server, the connection remains open to the server and the client can receive the response from it. Hence, every request is managed against the device without any problem, unlike UDP where the user needs to ensure the requests are going to the correct device, etc.

As with most other Internet traffic, the requests to the u-blox services are standard HTTPS requests. If the requests originate from within a private network, then configure a standard HTTPS proxy or firewall to forward requests and pass back responses between the private network and the u-blox services on the public Internet. No special handling is needed, as the requests are all standard HTTPS requests. The users should communicate to their local IT/network administrators to correctly enable this access.

If the services are accessed via an HTTPS proxy or firewall, all the requests may appear coming from the HTTPS proxy or firewall itself. To avoid overuse restrictions being applied, follow these steps:

- Inform u-blox of the IP address of the HTTPS proxy or firewall so that overuse restrictions can be removed for this IP address.
- Configure the HTTPS proxy or firewall to append the actual source IP address of the request to the standard HTTP "X-Forwarded-For" header field

If these conditions are met, then overuse restrictions will be correctly applied to the source device rather than the HTTPS proxy or firewall itself. The users should communicate to their local IT/network administrators to ensure this is the case.

# C AssistNow performance

The TTFF values reported in the table below refers to GNSS performance (as reported in UBX-NAV-STATUS message).

| | AssistNow Online | AssistNow Offline | AssistNow Autonomous |
|---|---|---|---|
| **Data** | | | |
| Data download frequency | At every start-up | Once every X days | Never |
| Data retrieval at start-up | Data downloaded from server | Pre-downloaded from local memory | Retrieved from local memory |
| Aiding data type | Ephemeris, almanac, time, health | Differential almanac correction | Automatically generated |
| Data validity period | 2 – 4 hours | 35 days | Up to 6 days |
| Size of downloaded data | 1 – 3 kB | 10 kB (1 day) … 335 kB (35 days) | N.A. |
| Acquisition (TTFF) performance | As low as 1 s[5] | As low as 5 s | As low as 10 s |
| **GNSS** | | | |
| Satellite systems supported | GPS, Galileo, GLONASS, BeiDou | GPS, Galileo, GLONASS, BeiDou | GPS, Galileo, GLONASS, BeiDou |

**Table 41: AssistNow performance**

# D GNSS UBX messages used in u-blox cellular modules

Following tables list the UBX messages used in different contexts in u-blox cellular modules.

| Local aiding | UBX message | UBX message id |
|---|---|---|
| | UBX-MGA-INI-POS-LLH | 0x13 0x40 type 0x01 |
| | UBX-MGA-INI-TIME-UTC | 0x13 0x40 type 0x10 |
| | UBX-NAV-TIMEUTC | 0x01 0x21 |
| | UBX-NAV-TIMELS | 0x01 0x26 |
| | UBX-NAV-PVT | 0x01 0x07 |

| Assistnow offline | UBX message | UBX message id |
|---|---|---|
| | UBX-MGA-ANO | 0x13 0x20 |

| Assistnow online | UBX message | UBX message id |
|---|---|---|
| | UBX-NAV-TIMEUTC | 0x01 0x21 |
| | UBX-NAV-STATUS | 0x01 0x03 |
| | UBX-NAV-PVT | 0x01 0x07 |
| | UBX-MGA-INI-TIME-UTC | 0x13 0x40 type 0x10 |

| GNSS Aiding Library | UBX message | UBX message id |
|---|---|---|
| | UBX-MGA-DBD | 0x13 0x80 |
| | UBX-MGA-ACK | 0x13 0x60 |
| | UBX-MGA-ANO | 0x13 0x20 |

[5] Depending on aiding data connection speed and latency

| Aiding Server / GNSS data conversion | UBX message | UBX message id |
|---|---|---|
| | UBX-MGA-GPS | 0x13 0x00 |
| | UBX-MGA-GLO | 0x13 0x06 |
| | UBX-MGA-QZSS | 0x13 0x05 |
| | UBX-NAV-POSLLH | 0x01 0x02 |
| | UBX-NAV-PVT | 0x01 0x07 |
| | UBX-NAV-STATUS | 0x01 0x03 |
| | UBX-NAV-TIMEGPS | 0x01 0x20 |
| | UBX-NAV-VELNED | 0x01 0x12 |
| | UBX-RXM-MEASX | 0x02 0x14 |

| GNSS positioning manager | UBX message | UBX message id |
|---|---|---|
| | UBX-CFG-PRT (M8 only) | 0x06 0x00 |
| | UBX-CFG-VALGET (M10 only) | 0x06 0x8b |
| | UBX-CFG-VALSET (M10 only) | 0x06 0x8a |
| | UBX-MON-VER | 0x0A 0x04 |
| | UBX-RXM-MEASX | 0x02 0x14 |

| Hybrid positioning manager | UBX message | UBX message id |
|---|---|---|
| | UBX-CFG-ITFM (M8 only) | 0x06 0x39 |
| | UBX-CFG-NAV5 (M8 only) | 0x06 0x24 |
| | UBX-CFG-NAVX5 (M8 only) | 0x06 0x23 |
| | UBX-CFG-SBAS (M8 only) | 0x06 0x16 |
| | UBX-CFG-PM2 (M8 only) | 0x06 0x3B |
| | UBX-CFG-RXM (M8 only) | 0x06 0x11 |
| | UBX-CFG-VALGET (M10 only) | 0x06 0x8b |
| | UBX-CFG-VALSET (M10 only) | 0x06 0x8a |
| | UBX-MON-HW | 0x0A 0x09 |
| | UBX-NAV-POSLLH | 0x01 0x02 |
| | UBX-NAV-VELNED | 0x01 0x12 |
| | UBX-NAV-SOL | 0x01 0x06 |
| | UBX-NAV-PVT | 0x01 0x07 |
| | UBX-NAV-STATUS | 0x01 0x03 |
| | UBX-MGA-INI-TIME-UTC | 0x13 0x40 type 0x10 |
| | UBX-MGA-INI-POS-LLH | 0x13 0x40 type 0x01 |

| Fine timing & GNSS RTC calibration | UBX message | UBX message id |
|---|---|---|
| | UBX-TIM-TM2 | 0x0D 0x03 |
| | UBX-NAV-SOL | 0x01 0x06 |
| | UBX-NAV-PVT | 0x01 0x07 |

| GNSS device management | UBX message | UBX message id |
|---|---|---|
| | UBX-MON-VER | 0x0A 0x04 |
| | UBX-CFG-RST | 0x06 0x04 |

| Cellular device sensor interface | UBX message | UBX message id |
|---|---|---|
| | UBX-CFG-TP5 (M8 only) | 0x06 0x31 |
| | UBX-CFG-VALGET (M10 only) | 0x06 0x8b |
| | UBX-CFG-VALSET (M10 only) | 0x06 0x8a |

# E Glossary

| Abbreviation | Definition |
|---|---|
| 3GPP | 3rd Generation Partnership Project |
| AT | AT Command Interpreter Software Subsystem, or attention |
| CI | Cell Identity |
| DDC | Display Data Channel |
| DLC | Data Link Connection |
| FS | File System |
| FW | Firmware |
| GLONASS | Globalnaya Navigatsionnaya Sputnikovaya Sistema |
| GNSS | Global Navigation Satellite System |
| GPRS | General Packet Radio Service |
| GPS | Global Positioning System |
| GSM | Global System for Mobile Communication |
| HTTP | HyperText Transfer Protocol |
| HTTPS | HyperText Transfer Protocol Secure |
| I2C | Inter-Integrated Circuit |
| IMEI | International Mobile Equipment Identity |
| IMSI | International Mobile Station Identity |
| LAC | Location Area Code |
| LES | Location Estimation Service |
| LNA | Low Noise Amplifier |
| MCC | Mobile Country Code |
| MGA | Multi-GNSS Assistance |
| MNC | Mobile Network Code |
| NMEA | National Marine Electronics Association |
| PSM | Power Saving Mode |
| QZSS | Quasi-Zenith Satellite System |
| SAW | Surface Acoustic Wave |
| SPG | Standard Precision GNSS |
| SV | Satellite Vehicle |
| TA | Timing Advance |
| TTFF | Time To First Fix |
| UART | Universal Asynchronous Receiver-Transmitter |
| UBX | u-blox |
| UDP | User Datagram Protocol |
| URC | Unsolicited Result Code |

# Related documentation


[1] u-blox SARA-R5 series data sheet, UBX-19016638
[2] u-blox SARA-R4 series data sheet, UBX-16024152
[3] u-blox SARA-R5 series AT commands manual, UBX-19047455
[4] u-blox SARA-R4 series AT commands manual, UBX-17003787
[5] u-blox SARA-R5 series system integration manual, UBX-19041356
[6] u-blox SARA-R4 series system integration manual, UBX-16029218
[7] GSM Association TS.09 – Battery Life Measurement and Current Consumption Technique, https://www.gsma.com/newsroom/wp-content/uploads//TS.09-v12.pdf
[8] I2C-bus specification and user manual – NXP Semiconductors, https://www.nxp.com/docs/en/user-guide/UM10204.pdf
[9] u-blox B36 vehicle tracking blueprint product summary, UBX-20012630
[10] u-blox M8 receiver description including protocol specification, UBX-13003221
[11] u-blox M10 SPG 5.10 interface description, UBX-21035062
[12] u-blox GNSS antennas application note, UBX-15030289
[13] u-blox multiplexer implementation in cellular modules application note, UBX-13001887
[14] 3GPP TS 27.010 – Terminal Equipment to User Equipment (TE-UE) multiplexer protocol
[15] u-blox Accurate Timing for the IoT whitepaper, https://www.u-blox.com/en/publication/white-paper/accurate-timing-iot
[16] Thingstream IoT Location-as-a-Service pricing, https://portal.thingstream.io/pricing/laas
[17] u-blox M8 receiver description – documentation update, UBX-21004937


☞ For regular updates to u-blox documentation and to receive product change notifications, register on our homepage (www.u-blox.com).

# Revision history

| Revision | Date | Name | Comments |
|---|---|---|---|
| R01 | 02-Oct-2020 | sses | Initial release |
| R02 | 22-Dec-2020 | sses | Added SARA-R4 series |
| R03 | 28-Jun-2021 | fvid/anda/wcos | Added “IoT Location-as-a-Service” section;<br>added table for comparison between combos and stand-alone solutions;<br>updated “Power saving modes” section;<br>added timepulse configurability |
| R04 | 01-Jun-2022 | fvid/mace/vbon | Added “Time to fix on combo products” section;<br>updated sections related to +UTIMECELLSELECT AT command use;<br>other minor corrections and clarifications |
| R05 | 14-Dec-2022 | hgru/sses/fvid | Extended document applicability to SARA-R422M10S, SARA-R422S.<br>Updated “Time to fix on combo products” section.<br>Added minor corrections and clarifications. |
| R06 | 04-Jul-2023 | fvid | Extended document applicability to SARA-R500E. |

# Contact


Address: u-blox AG
Zürcherstrasse 68
8800 Thalwil
Switzerland


For further support and contact information, visit us at www.u-blox.com/support.